KCSE MAHEMATICS PP1 1996-2016 QUESTIONS

AMOBI PUBLISHERS GROUP OF EXAMINERS

AMOBI SOFT COPY PUBLISHERS

Transparency, Honesty and Accountability Defined

KCSE MATHS PP1 1996-2016 QSNS

Prefer Calling Sir Obiero Amos @ 0706 851 439 for Marking Schemes 2006-2016

N/B In Response to the Huge Costs Associated in Coming Up with Such/Similar Resources Regulary, We inform us All, MARKING SCHEMES ARE NOT FREE OF CHARGE. However Similar QUESTIONS, Inform of soft Copies are Absolutely FREE to Anybody/Everybody Hence NOT FOR SALE

by Amobi Soft Copy Publishers

MATHEMATICS

K.C.S.E PAPER 121/ 1 1995

QUESTIONS

QUESTIONS SECTION 1 (52 MKS)

Answer all the questions in this section

1. Without using logarithms tables evaluate (3 mks)

$$\sqrt{\frac{384.16 \times 0.0625}{96.04}}$$

2. Simplify (3 mks)

$$\frac{2x - 2}{6x^2 - x - 12} \div \frac{x - 1}{2x - 3}$$

3. Every week the number of absentees in a school was recorded. This was done for 39 weeks these observations were tabulated as shown below

Number of absentees	0.3	4 -7	8 -11	12 - 15	16 - 19	20 - 23
(Number of weeks)	6	9	8	11	3	2

Estimate the median absentee rate per week in the school (2 mks)

4. Manyatta village is 74 km North West of Nyangata village. Chamwe village is 42 km west of Nyangate. By using an appropriate scale drawing, find the bearing of Chamwe from Manyatta (2 mks)

5. A perpendicular to the line -4x + 3 = 0 passes through the point (8, 5) Determine its equation (2 mks)

6. The volume Vcm^3 of an object is given by

$$V = \frac{2}{3}\pi r^3 \left(\frac{1 - 2}{sc^2}\right)$$

Express in term of π r, s and V (3 mks)

8. Two baskets A and B each contains a mixture of oranges and lemons. Basket A contains 26 oranges and 13 lemons. Basket B contains 18 oranges and 15 lemons. A child selected basket at random and picked at random a fruit from it.Determine the probability that the fruit picked was an orange.

9. A solid cone of height 12cm and radius 9 cm is recast into a solid sphere. Calculate the surface area of the sphere. (4 mks)

10. The first, the third and the seventh terms of an increasing arithmetic progression are three consecutive terms of a geometric progression. In the first term of the arithmetic progression is10 find the common difference of the arithmetic progression. (4 mks)

11. Akinyi bought and beans from a wholesaler. She then mixed the maize and beans the ratio 4:3 she brought the maize as Kshs. 12 per kg and the beans 4 per kg. If she was to make a profit of 30% what should be the selling price of 1 kg of the mixture? (4 mks)

12. A clothes dealer sold 3 shirts and 2 trousers for Kshs. 840 and 4 shirts and 5 trousers for Kshs1680.
Form a matrix equation to represent the above information. Hence find the cost of 1 shirt and the cost of 1 trouser. (4 mks)

13. Water flows from a tap. At the rate $27cm^3$ per second, into a rectangular container of length 60cm, breath 30 cm and height 40 cm. If at 6.00 p.m. the container was half full, what will be the height of water at 6.04 pm? (3 mks)

14. In the diagram below < CAD, = 20^0, < AFE = 120^0 and BCDF is a cyclic quadrilateral. Find < FED. (3 mks)

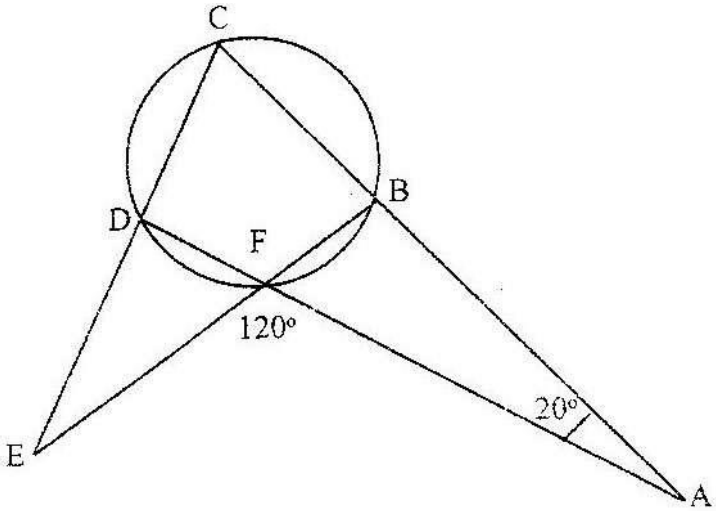

15. The cash prize of a television is Kshs 25000. A customer paid a deposits of Kshs 3750. He repaid the amount owing in 24 equal monthly installments. If hw was charged simple interest at the rate of 40% p.a, how much was each installment? (4 mks)

16. A bus takes 195 minutes to travel a distance of (2x + 30) km at an average speed of (x – 20)km/h
Calculate the actual distance traveled. Give your answers in kilometers. (3 mks)

SECTION II (48 MKS)
Answer any six questions from this section

17. At the beginning of every year, a man deposited Kshs 10,000 in a financial institution which paid compound interest at the rate of 20% p.a. He stopped further deposits after three years. The Money remained invested in the financial institution for a further eight years.

(a) How much money did he have at the end of the first three years (4 mks)
(b) How much interest did the money generate in the entire period (4 mks)

18. The figure below is a right pyramid with a rectangular base ABCD and VO as the height. The vectors AD= a, AB = b and DV = v

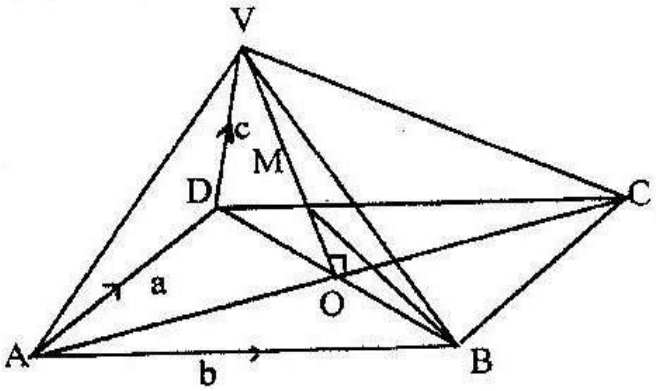

a) Express
(i) AV in terms of a and c (1 mk)
(ii) BV in terms of a, b and c (2 mks)

(b) M is point on OV such that OM: MV = 3:4, Express BM in terms of a, b and c.Simplify your answer as far as possible (5 mks)

19. (a) In the figure below O is the centre of a circle whose radius is 5 cm
AB = 8 cm and < AOB is obtuse.

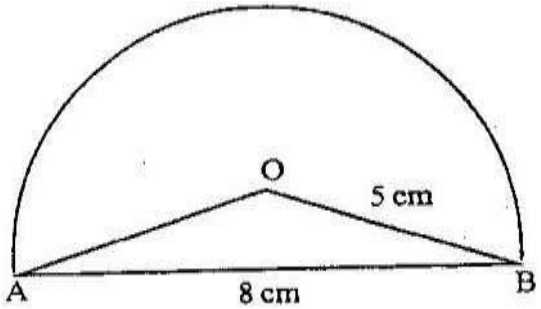

Calculate the area of the major segment (6 mks)

(b) A wheel rotates at 300 revolutions per minute. Calculate the angle in radians through which a point on the wheel turns in one second.

20. The table shows the height metres of an object thrown vertically upwards varies with the time t seconds

The relationship between s and t is represented by the equations $s = at^2 + bt + 10$ where b are constants.

t	0	1	2	3	4	5	6	7	8	9	10
s		45.1									

(a) (i) Using the information in the table, determine the values of a and b (2 mks)

(ii) Complete the table (1 mk)

(b) (i) Draw a graph to represent the relationship between s and t (3 mks)

(ii) Using the graph determine the velocity of the object when t = 5 seconds (2 mks)

21. (a) Construct a table of values for the function $y = x^2 - 6$ for $-3 < x < 4$ (2 mks)

(b) By drawing a suitable line on the same grid estimate the roots of the equation $X^2 + 2x - 2 = 0$ (3 mks)

22. The figure below represents a plot of land ABCD, where BC = CD = 60 metres, $< BCD = 120^0$ $< ABC = 75^0$ and $< ADC = 85^0$

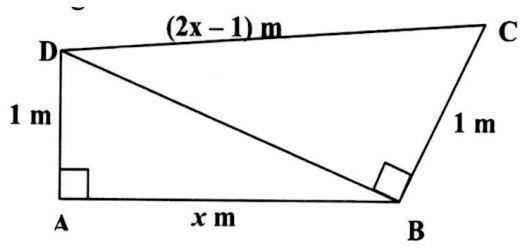

(a) Calculate the distance from B to through D (5 mks)

(b) The plot is to be fenced using poles that are 3 metres apart except at corner A, where the two poles next to the corner pole are each less than 3 metres from A. Calculate the distance from the pole at corner at corner A to each of the poles next to it.

23. On the grid provided on the opposite page ABCE is a trapezium

(a) ABCD is mapped onto A‘B‘C‘D‘ by a positive quarter turn. Draw the image A‘B‘C‘D‘ on the grid. (1 mk)

(b) A transformation maps -2 -1 A‘B‘C‘D onto A‖ B‖ C‖ D‖
1
-1

(i) Obtain the coordinates of A‖ B‖ C‖ D‖ on the grid (2 mks)
(ii) Plot the image A‖ B‖ C‖ D‖ on the grid (1mk)

(c) Determine a single matrix that maps A‖ B‖ C‖ D‖ (4 mks)

MATHEMATICS

K.C.S.E PAPER 121/ 1 1996

QUESTIONS

QUESTIONS SECTION 1 (52 Mks)

1. Use logarithms to evaluate (3 mks)

$$\sqrt[3]{\frac{36.15 \times 0.02573}{1,938}}$$

2. Factorize completely $3x^2 - 2xy - y^2$ (2 mks)

3. The cost of 5 skirts and 3 blouses is Kshs 1750. Mueni bought three of the skirts and one of the blouses for Kshs 850.
Find the cost of each item (3 mks)

4. A man walks directly from point A towards the foot of a tall building 240m away. After covering 180m, he observes that the angle of the top of the building is 45. Determine the angle of elevation of the top of the building from A. (3 mks)

5. In the figure below, ABCD is a cyclic quadrilateral and BD is a diagonal. EADF is a straight line. <CDF = 68^0, < BDC = 45^0 and < BAE = 98^0.

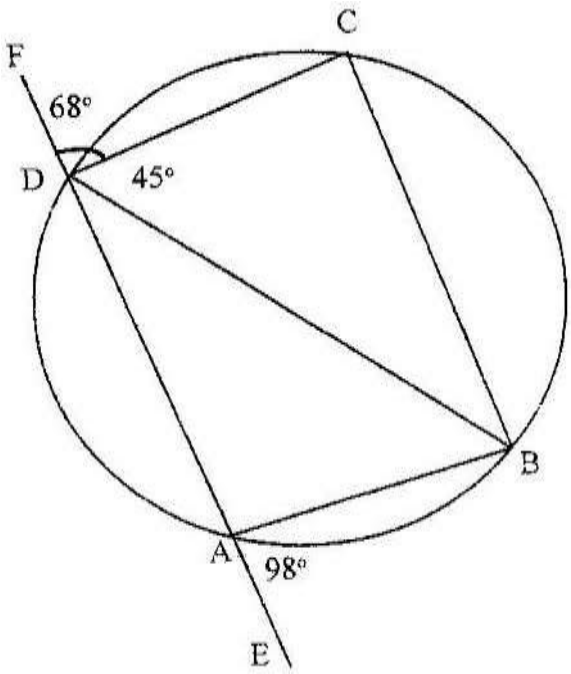

Calculate the size of

(a) < ABD (2 mks)

(b) < CBD (2 mks)

6. An employee started on a salary of £ 6,000 per annum and received a constant annual increment. If he earned a total of £ 32,400 by the end of five years, calculate his annual increment. (3 mks)

7. Mr. Ngeny borrowed Kshs. 560,000 from a bank to buy a piece of land. He was required to repay the loan with simple interest for a period of 48 months. The repayment amounted to Kshs21000 per month. Calculate

(a) The interest paid to the bank (2 mks)

(b) The rate per annum of the simple interest (4 mks)

8. A rectangular tank of base 2.4 m by 2.8 m and a height of 3 m contains 3,600 liters of water initially. Water flows into the tank at the rate of 0.5 litres per second Calculate the time in hours and minutes, required to fill the tank (4 mks)

9. A car dealer charges 5% commission for selling a car. He received a commission of Kshs 17,500 for selling a car. How much money did the owner receive from the sale of his car? (2 mks)

10. Five pupils A, B, C, D and E obtained the mks 53, 41, 60, 80 and 56 respectively. The table below shows part of the work to find the standard deviation.

Pupil	Mk x	x - x	$(x-x)^2$
A	53	-5	
B	41	-17	
C	60	2	
D	80	22	
E	56	-2	

(a) Complete the table (1 mk)

(b) Find the standard deviation (3 mks)

11. A and B are two matrices. If $A = \begin{pmatrix} 1 & 2 \\ 4 & 3 \end{pmatrix}$ find B given that $A^2 = A + B$ (4 mks)

12. Solve the equation

$$\sin \frac{5}{2}\theta = \frac{-1}{2} \text{ for } 0^0 \leq 0 \leq 180^0$$ (2 mks)

13. A fruiterer bought 144 pineapples at Kshs 100 for every six pineapples. She sold some of them at Kshs. 72 for every three and the rest at Kshs 60 for every two.

If she made a 65% profit, calculate the number of pineapples sold at Kshs 72 for every three

(3 mks)

14. Make V the subject of the formula

$$T = \frac{1}{2} m (u2 - v^2)$$

(3 mks)

15. The figure below represents a hollow cylinder. The internal and external radii are estimated to be 6 cm and 8 cm respectively, to the nearest whole number. The height of the cylinder is exactly 14 cm.

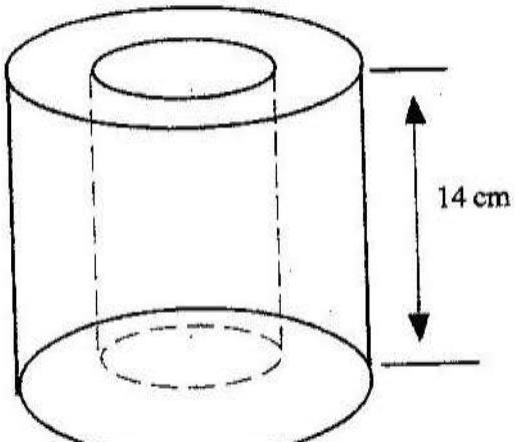

(a) Determine the exact values for internal and external radii which will give maximum volume of the material used. (1 mk)

(b) Calculate the maximum possible volume of the material used
Take the value of to be 22/7 (2 mks)

16. Two lorries A and B ferry goods between tow towns which are 3120 km apart. Lorry A traveled at km/h faster than lorry B and B takes 4 hours more than lorry A to cover the distance.

Calculate the speed of lorry B (5 mks)

SECTION II (48 MKS)

Answer any six questions from this section

17. The data given below represents the average monthly expenditure, E in K £, on food in a certain village. The expenditure varies with number of dependants, D in the family.

Dependants	3	7	12	25	32
Expenditure E (K£)	-210	250	305	440	500

(a) Using the grid provided, plot E against D and draw the line of the best fit (2 mks)

(b) Find the gradient and the E- intercept of the graph (3 mks)

(c) Write down an equation connecting E and D (1 mk)

(d) Estimate the cost of feeding a family with 9 dependants (2 mks)

18. The table below shows the income tax rates

Total income per month in Kenya	Rate in shillings per pound
1 – 325	2
326 – 650	3
651-975	4
976 – 1300	5
1301 – 1625	7
Over 1625	7.50

Mr. Otiende earned a basic salary of Kshs 13,120 and a house allowance of Kshs 3,000 per month. He claimed a tax relief for a married person of Kshs 455 per month

(a) Calculate

(i) The tax payable without the relief

(ii) The tax paid after the relief

(b) Apart from the income tax, the following monthly deductions are made. A service charge of Kshs 100, a health insurance fund of Kshs 280 and 2% of his basic salary as widow and children pension scheme.

Calculate

(i) The total monthly deductions made from Mr. Otiende‘s income (2 mks)

(ii) Mr. Otiende‘s net income from his employment (2 mks)

Prefer Calling Sir Obiero Amos @ 0706 851 439 for the Marking Schemes

19. The equation of a curve us $y = 3x^2 - 4x + 1$

(a) Find the gradient function of the curve and its value when $x = 2$ (2 mks)

(b) Determine

(i) The equation of the tangent to the curve at the point (2, 5) (2 mks)

(ii) The angle which the tangent to the curves at the point (2, 5) makes with the horizontal (1 mk)

(iii) The equation of the line through the point (2, 5) which is perpendicular to the tangent in(b) (i)

20. The position of two A and B on the earth's surface are (36^0 N, 49^0E) and (360^0N, 131^0 W) respectively.

(a) Find the difference in longitude between town A and town B (2 mks)

(b) Given that the radius of the earth is 6370, calculate the distance between town A and town B.

(c) Another town, C is 840 east of town B and on the same latitude as towns A and B. Find the longitude of town C.

21. The table below shows some values of the function $y = x^2 + 2x - 3$

x	-6	-6.75	-5.5	-5	-4.75	-4.5	4.25	-4.0	-3.75	-3.75	-3.5	-3.25	-3
y	21	18.56		14.06		10.06	8.25		5		2.25	1.06	0

a) Complete the table

b) Using the completed table and the mid- ordinate rule with six ordinates, estimate the area of the region bounded by the $y = x^2 + 2x - 3$ and the line $y = 0$, $x = -6$ and $x = -3$ (3 mks)

(i) By integration find the actual area of the region in (b) above (2 mks)

(ii) Calculate the percentage error arising from the estimate in (b) (2 mks)

22. In the diagram below OABC is a parallelogram, OA = a and AB = b. N is a point on OA such that ON: NA = 1: 2

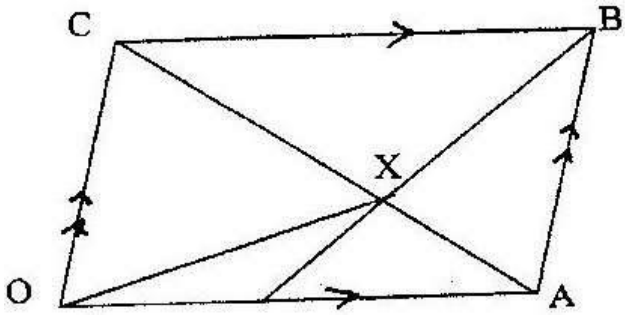

(a) Find

(i) AC in terms of a and b

(ii) BN in terms of a and b

(b) The lines AC and BN intersect at X, AX = hAC and BX = kB

(i) By expressing OX in two ways, find the values of h and k

(ii) Express OX in terms of a and b (1 mk)

23. Use ruler and compasses only in this question

The diagram below shows three points A, B and D

(a) Construct the angle bisector of acute angle BAD (1 mk)

(b) A point P, on the same side of AB and D, moves in such a way that < APB = 22 ½^0 construct the locus of P (6 mks)

(c) The locus of P meets the angle bisector of < BAD at C measure < ABC (1 mk)

Hence find area of the image A‖ B‖ C‖ (2 mks)

MATHEMATICS

K.C.S.E PAPER 121/ 1 1997

QUESTIONS

Answer all the questions in this section

1. Use logarithms to evaluate $\dfrac{(1934)^2 \times 0.00324}{\sqrt{436}}$

2. Find the greatest common factor of x^3y^2 and $4xy^4$. Hence completely the expression $x^3y^2 - 4xy^4$

3. In the figure below PQRS is a rhombus, < SQR = 55^0, < QST is a right angle and TPQ is a straight line

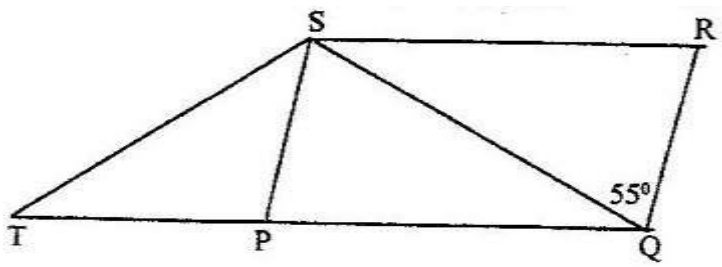

Find the size of the angle STQ

4. In geometric progression, the first is a and the common ratio is r. The sum of the first two terms is 12 and the third term is 16.

   (a) Determine the ratio $\dfrac{ar^2}{a + ar}$

   (b) If the first term is larger than the second term, find the value of r.

5. There are two signposts A and B on the edge of the road. A is 400 m to the west of b. A tree is on a bearing of 060^0 from A and a bearing of 330^0 from B Calculate the shortest distance of the tree from the edge of the road.

6. A cylinder of radius 14 cm contains water. A metal solid cone of base radius 7cm and height 18cm is submerged into the water. Find the change in height of the water level in the cylinder.

7. A company saleslady sold worth Kshs 42, 000 from this sale she earned a commission of Kshs 4,000

(a) calculate the rate of commission
(b) If she sold goods whose total mked price was Kshs 360,000 and allowed a discount of 2% calculate the amount of commission she received.

8. The following enrollment figures for twenty primary schools were collected

934	923	936	924	933	933	937	926	923
934	931	929	934	927	932	934	927	940

(a) Determine the mode
(b) The difference from an assumed mean were obtained and rearranged as follows
(i) Determine the assumed mean
(ii) Use the assumed mean in (b) (i) to find the mean enrolment

9. Given that A = $\begin{pmatrix} 1 & 3 \\ 5 & 3 \end{pmatrix}$ B $\begin{pmatrix} 3 & 1 \\ 5 & -1 \end{pmatrix}$, C = $\begin{pmatrix} p & 0 \\ 0 & q \end{pmatrix}$ and AB = BC, determine the value of P

10. The curve $y= ax^3 – 3x^2 – 2x + 1$ has the gradient 7 when x=1. Find the value of a

11. Find the value of θ between 0^0 and 360^0 satisfying the equation 5 sin θ = 4

12. A businesswoman bought two bags of maize at the same price per bag. She discovered that one bag was of high quality and the other of low quality. On the high quality bag she made a profit by selling at Kshs 1,040. Whereas on the low quality bag she made a loss by selling at Kshs 880. If the profit was three times the loss, calculate the buying price per bag.

13. Given that $y = \frac{b - bx^2}{cx^2 - a}$ make x the subject

14. Two towns P and Q are 400 km apart. A bus left P for Q. It stopped at Q for one hour and then started the return journey to P. One hour after the departure of the bus from P, a trailer also heading for Q left P. The trailer met the returning bus ¾ of the way from P to Q. They met t hours after the departure of the bus from P.

(a) Express the average speed of the trailer in terms of t
(b) Find the ration of the speed of the bus so that of the trailer.

15. Akinyi bought three cups and four spoons for Kshs. 324. Wanjiku bought five cups and Fatuma bought two spoons of the same type as those bought by Akinyi. Wanjiku paid Kshs 228 more than Fatuma. Find the price of each cup and spoon.

16. (a) Work out the exact value of $R = \dfrac{1}{0.003146 - 0.003130}$

(b) An approximate value of R may be obtained by first correcting each of the decimal in the denominator to 5 decimal places

(i) The approximate value

(ii) The error introduced by the approximation

SECTION II (48 MKS)

Answer six questions from this section

17. The figure below shows a portable kennel

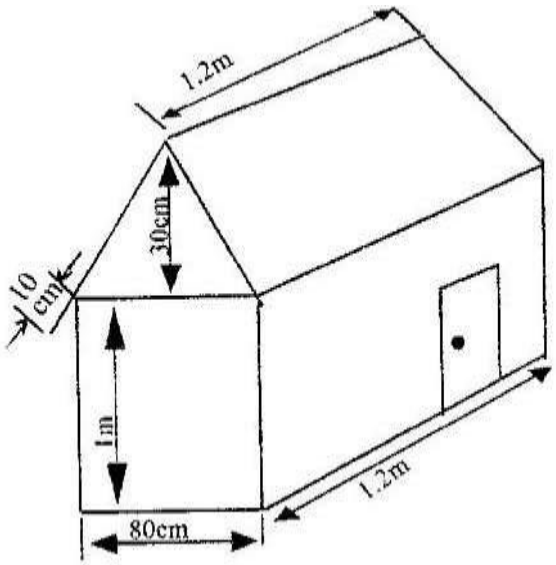

(a) Calculate

(i) The total surface area of the walls and the roof (include the door as part of the wall)

(ii) The total area of the roof

(b) The cost of roofing is Kshs 300 per square metre and that of making walls and floor Kshs 350 per square metre. Find the cost of making the kennel

(c) Find the cost of roofing another kennel whose dimensions are 50% more than those of given kennel.

18. A ship leaves an island (5^0N, 45^0E) and sails due east for 120 hours to another island. The average speed of the ship is 27 knots.

(a) Calculate the distance between the two islands
(i) in nautical miles
(ii) in kilometers

(b) Calculate the speed of the ship in kilometers per hour
(c) Find the position of the second island
(take 1 nautical mile to be 1.853 Km and the radius of the earth to be 6370 Km)

19. Using ruler and compasses only construct triangle ABC such that AB = 4 cm, BC = 5cm and < ABC = 120^0. Measure AC.
On the diagram, construct a circle which passes through the vertical of the triangle ABC. Measure the radius of the circle
Measure the shortest distance from the centre of the circle to line BC.

20. (a) Draw the graph of $y= 6+x-x^2$, taking integral value of x in $-4 \leq x \leq 5$. (The grid is provided. Using the same axes draw the graph of $y = 2 – 2x$

(b) From your graphs, find the values of X which satisfy the simultaneous equations $y = 6 + x - x^2$

$y = 2 – 2x$

(c) Write down and simplify a quadratic equation which is satisfied by the values of x where the two graphs intersect.

21. The water supply in a town depends entirely on two water pumps. A and B. The probability of pump A filling is 0.1 and the probability of pump B failing is 0.2. Calculate the probability that

(a) Both pumps are working
(b) There is no water in the town
(c) Only one pump is working
(d) There is some water in the town

22. In the figure below OA = a, OB = b, AB = BC and OB: BD = 3:1

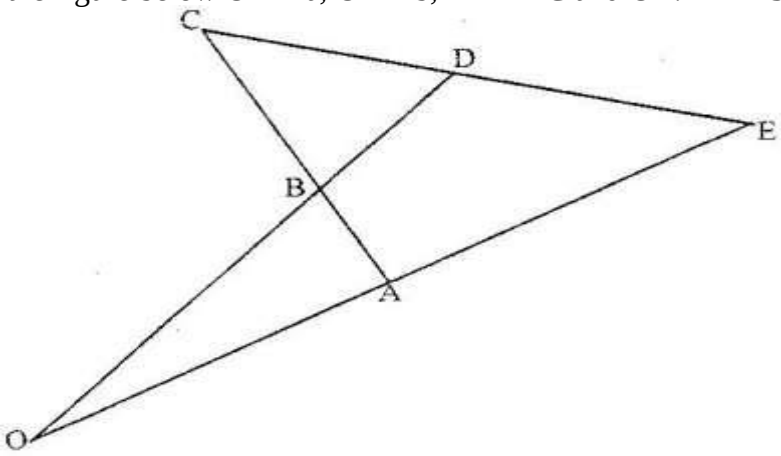

(a) Determine
   (i) AB
   (ii) CD, in terms of a and b

(b) If CD : DE = 1:k and OA:AE = 1: m determine
   (i) DE in terms of a, b and k

23. The figure on the grid shows a triangular shaped object ABC and it's image A'B' C'

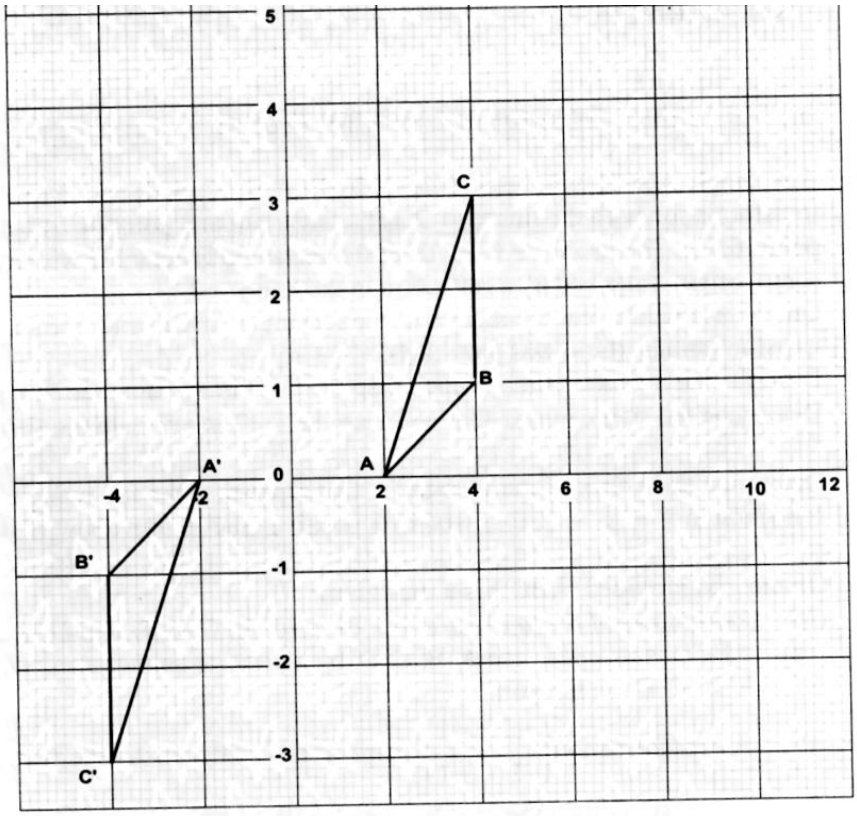

(a) (i) Describe fully the transformation that maps ABC and A‘B‘C‘

(ii) Find a 2 x 2 matrix that transforms triangle ABC onto triangle A‘ B‘ C‘

(b) The matrix $P = \begin{pmatrix} 2 & 1 \\ 1 & 1 \end{pmatrix}$ transforms triangle ABC onto A‖ B‖ C‖

(i) Find the coordinates of A‖ B‖ C‖

(c) Find the area of triangle ABC

(d) Hence find the area of the image A‖ B‖ C

24. The coordinates of the points P and Q are (1, -2) and (4, 10) respectively.
A point T divides the line PQ in the ratio 2: 1 (a) Determine the coordinates of T

(b) (i) Find the gradient of a line perpendicular to PQ

(ii) Hence determine the equation of the line perpendicular PQ and passing through T

(iii) If the line meets the y- axis at R, calculate the distance TR, to three significant figures

MATHEMATICS

K.C.S.E PAPER 121/ 1 1998

QUESTIONS

QUESTIONS SECTION 1 (52 Mks)

Answer all the questions in this section

1. Evaluate without using mathematical tables

$$\left(1000\sqrt{\frac{0.0128}{200}}\right)$$

2. Factorize $a^2 - b^2$

   Hence find the exact value of $2557^2 - 2547^2$

3. The mass of 6 similar books and 4 similar biology books is 7.2 kg. The mass of 2 such art books and 3 such biology books is 3.4 kg. Find the mass of one art book and mass of one biology book.

4. In the figure below, AB is parallel to DE, DE bisects angle BDG, angle DCF = 60^0 and angle CFG = 110^0

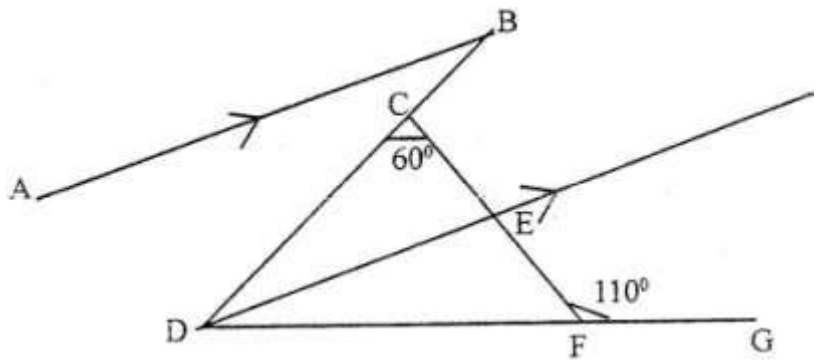

Find

(a) $\angle$ CDF

(b) $\angle$ ABD

Give reasons for your answers

5. A salesman gets a commission of 2.4% on sales up to Kshs 100.00. He gets an additional commission of 1.5% on sales above this. Calculate the commission he gets on sales worth Kshs 280.000

Prefer Calling Sir Obiero Amos @ 0706 851 439 for the Marking Schemes

6. A point A is directly below a window. Another point B is 15 m from A and at the same horizontal level. From B angle of elevation of the top of the bottom of the window is 300 and the angle of elevation of the top of the window is 350. Calculate the vertical distance.

   (a) From A to the bottom of the window
   (b) From the bottom to top of the window

7. A matrix A is given by A = $\begin{pmatrix} x & 0 \\ 5 & y \end{pmatrix}$

   a) Determine A^2

   b) If $A^2 = \begin{pmatrix} 1 & 0 \\ 0 & 1 \end{pmatrix}$ determine the possible pairs of values of x and y

8. Given that log y = log (10^n) make n the subject

9. A quantity T is partly constant and partly varies as the square root of S.

   a) Using constants a and b, write down an equation connecting T and S.
   b) If S = 16, when T = 24 and S = 36 when T = 32, find the values of the constants a and b,

10. The third and fifth term of an arithmetic progression are 10 and -10 respectively a) Determine the first and the common difference
    b) The sum of the first 15 terms

11. A cyndrical container of radius 15cm has some water in it. When a solid is submerged into the water, the water level rises by 1.2 cm.

    (a) Find, the volume of the water displaced by the solid leaving your answer in Terms of $\prod$

    (b) If the solid is a circular cone of height 9 cm, calculate the radius of the cone to 2 decimal places.

12. Six weeks after planting the height of bean plants were measured correct to the nearest centimeter. The frequency distribution is given in the table below.

Height (x)	$0 \leq x \leq 4$	$4 \leq x \leq 8$	$8 \leq x \leq 12$	$12 \leq x \leq 16$	$16 \leq x \leq 20$
Frequency	3	8	19	14	6
Cumulative Frequency					

(a) Enter the cumulative frequency values in the above table
(b) Estimate the median height of the plants

13. A financial institution charges compound interest on money borrowed. A business woman borrowed Kshs. 16, 000 from the financial institution. She paid back Kshs 25,000 after 2 years. Find the interest rate per annum.

14. Solve the equation $\cos(3\theta + 120^0) = \sqrt{3}/2$ for $0 \leq \theta \leq 180^0$

15. The radius of circle is given as 2.8 cm to 2 significant figures
(a) If C is the circumference of the circle, determine the limits between which C/Π lies
(b) By taking Π to be 3.142, find, to 4 significant figures the line between which the circumference lies.

16. A and B are towns 360 km apart. An express bus departs form A at 8 am and maintains an average speed of 90 km/h between A and B. Another bus starts from B also at 8 am and moves towards A making four stops at four equally spaced points between B and A. Each stop is of duration 5 minutes and the average speed between any two spots is 60 km/h. Calculate distance between the two buses at 10 am.

17. Wainaina has two dairy farms. A and B. Farm A produces milk with 3 ½ percent fat and farm B produces milk with 4 ¾ percent fat.

(a) Determine
(i) The total mass fat in 50 kg of milk from farm A and 30 kg of milk from farm B

(ii) The percentage of fat in a mixture of 50 kg of milk from A and 30 kg of milkfrom B

(c) Determine the range of values of mass of milk from farm B that must be used in a 50 kg mixture so that the mixture may have at least 4 percent fat.

18. The table below shows monthly income tax rates

Monthly taxable pay K £	Rate of tax Kshs per £
1 - 342	2
343 - 684	3
685 - 1026	4
1027-1368	5
1369 - 1710	6
Over 1710	

A civil servant earns a monthly salary of Kshs 20,000 and is provided with a house at a nominal rent of Kshs 700 per month

(a) Taxable pay is the employee‘s salary, plus 15% of salary, less nominal rent. Calculate the civil servant‘s taxable pay in K £

(b) Calculate the total tax

(c) If the employee is entitled to a personal relief of Kshs. Per month, what is the net tax.

19. A quadrilateral ABCD has vertices A (4, -4), B(2, -4), C(6, -6) and D (4, -2)

(a) On the grid provided draw the quadrilateral ABCD.

(b) A‘B‘C‘D is the image of ABCD under positive quarter turn about the origin. On the same grid draw the image A‘B‘C‘D

(c) A‘B‘C‘D‘ is the image of A‘ B‘ C‘ D‘ under the transformation given by the matrix $\begin{pmatrix} 1 & -2 \\ 0 & 1 \end{pmatrix}$

(i) Determine the coordinators of A‖ B‖ C‖ D‖

(ii) On the same grid draw the quadrilateral A‖ B‖ C‖ D‖

(d) Determine a single matrix that maps ABCD onto A‖ B‖C‖D‖

20. The position of two towns X and Y are given to the nearest degree as
X (45^0 N, 10^0W) and Y (45^0 N, 70^0W) Find

(a) The distance between the two towns in
(i) Kilometers (take the radius of the earth as 6371)

(ii) Nautical miles (take I nautical mile to be 1.85 km) (c) The local time at X when the local time at Y is 2.00 pm.

21. A cyndrical can has a hemisphere cap. The cylinder and the hemisphere are of radius 3.5 cm. The cylindrical part is 20 cm tall. Take ∏ to be 22/7 calculate

(a) the area of the circular base

(b) the area of the curved cylindrical surface (c) the area of the curved hemisphere surface (d) The total surface area.

22. The figure below shows a grid of equally spaced parallel lines
AB = a and BC = b

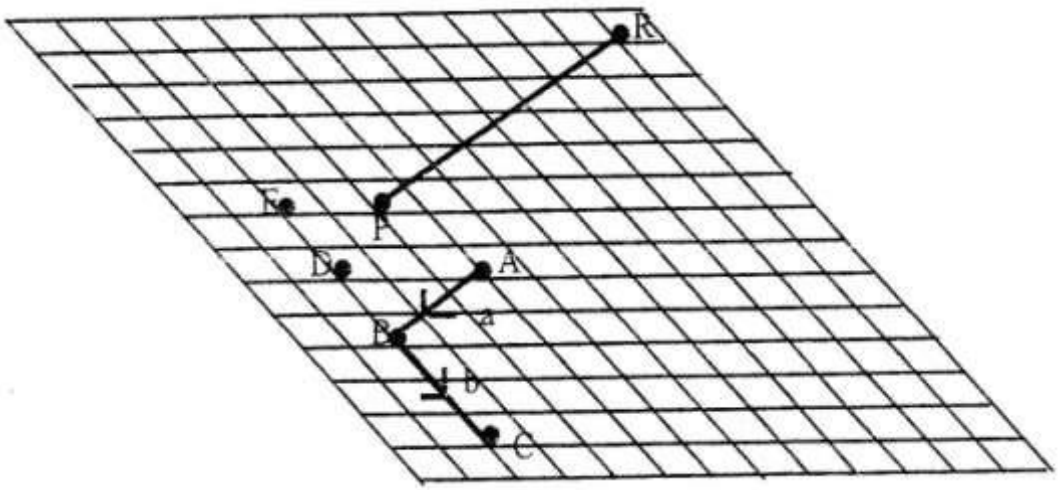

(a) Express
(i) AC in terms of a and b
(b) Using triangle BEP, express BP in terms of a and b

(c) PR produced meets BA produced at X and Pr = $^{1b}/_{9}$ - $^{8a}/_{3}$

By writing PX as kPR and BX as hBA and using the triangle BPX determine the ratio PR: RX

23. Use a ruler and a pair of compasses only for all constructions in this question.

(a) On the line BC given below, construct triangle ΔABC such that $\Delta ABC = 30^0$ And BA = 12 cm

(b) Construct a perpendicular from A to meet BC produced at D. Measure CD

(c) Construct triangle A‘B‘C‘ such that the area of triangle A‘B‘C is the three quarters of the area of triangle ABC and on the same side of BC as triangle ABC.

(d) Describe the lucus of A‘

24. In a livestock research stations a new drug for a certain fowl disease is being tried. A sample of 36 fowls were diagnosed to have the disease. Twenty (20) fowls were treated with the drug and the rest were not.

(a) Calculate the probability that a fowl picked at random is

(i) treated with the drug

(ii) Not treated with the drug

25. If a fowl is treated, probability of dying is 1/10 while if not treated the probability is 7/10 calculate the probability that, a fowl picked at random from the 36 fowl is

(i) treated with the drug and will die
(ii) Not treated with the drug and will die
(iii) Not treated with the drug and will not die

MATHEMATICS

K.C.S.E PAPER 121/ 1 1999

QUESTIONS

Answer all questions in this section

1. (a) Evaluate

$$\frac{-8 \div 2 + 12x\ 9 - 4 \times 6}{56 \div 7 \times 2}$$

(b) Simplify the expression

$5a - 4b - 2\ [a - (2b + c)]$

2. A point (-5, 4) is mapped onto (-1, -1) by a translation. Find the image of (-4, 5) under the same translation.

3. Find by calculation the sum of all the interior angles in the figure ABCDEFGHI below

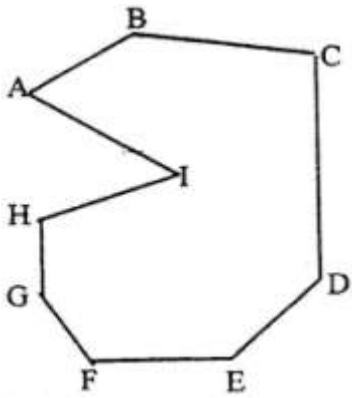

4. An open right circular cone has a base radius of 5 cm and a perpendicular height of 12 cm.

Calculate the surface area of the cone (take ∏ to be 3.142)

5. The figure below is a map of a forest drawn on a grid of 1 cm squares

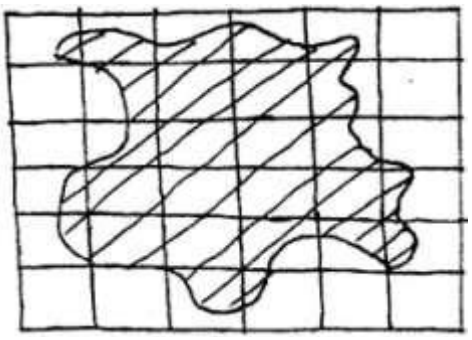

Prefer Calling Sir Obiero Amos @ 0706 851 439 for the Marking Schemes

(a) Estimate the area of the map in square centimeters

(b) If the scale of the map is 1: 50,000 estimate the area of the forest in hectares

6. The table below shows the weight and price of three commodities in a given period

Commodity	Weight	Price Relatives
X	3	125
Y	4	164
Z	2	140

Calculate the retail index for the group of commodities

7. Two baskets A and B each contain a mixture of oranges and limes, all of the same size. Basket A contains 26 oranges and 13 limes. Basket B contains 18 oranges and 15 limes. A child selected a basket at random and picked a fruit at a random from it.

(a) Illustrate this information by a probabilities tree diagram

(b) Find the probability that the fruit picked was an orange

8. A girl wanted to make a rectangular octagon of side 14cm. She made it from a square piece of a card of size y cm by cutting off four isosceles triangles whose equal sides were x cm each, as shown below.

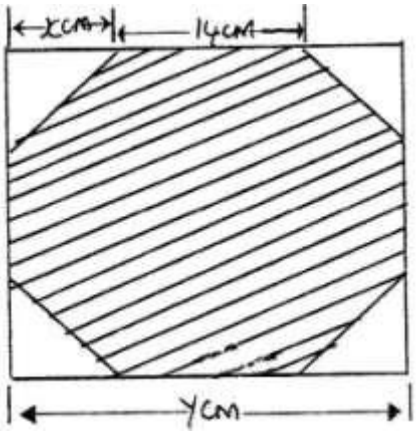

(a) Write down an expression for the octagon in terms of x and y

(b) Find the value of x

(c) Find the area of the octagon

9. The length and breath of a rectangular floor were measured and found to be 4.1 m and 2.2 m respectively. If possible error of 0.01 m was made in each of the measurements, find the:
   (a) maximum and minimum possible area of the floor

   (b) Maximum possible wastage in carpet ordered to cover the whole floor

10. A business woman opened an account by depositing Kshs. 12,00 in a bank on 1st July 1995. Each subsequent year, she deposited the same amount on 1st July. The bank offered her 9% per annum compound interest. Calculate the total amount in her account on
   (a) 30th June 1996

   (b) 30th June 1997

11. Given below is line BC. Without using a protractor construct another through B Making an angle of $37\frac{1}{2}^0$ with BC. Using the constructed line subdivide BC into 7 equal parts.

B ———————————————— C

12. ABCD is a cyclic quadrilateral and AB is a diameter. Angle ADC = 117^0 Giving reason for each step, calculate $\angle$ BAC

13. An artisan has 63 kg of metal of density 7, 000kg/m^3. He intends to use to make a rectangular pipe with external dimensions 12 cm by 15 cm and internal dimensions 10 cm by 12 cm. Calculate the length of the pipe in metres

14. An equilateral triangle ABC lies in a horizontal plane, A vertical flag AH stand at A. If AB = 2 AH find the angle between the places ABC and HBC

15. By substituting triangle for (2 – 0) or otherwise simplify the expression $(x + 2 – a)^2 + (2 – a-x)^2 – 2(x- 2 + a) (x + 2 – a)$. Give your answer in terms of a and as a product of two squares.

16. A particle moves on a straight line. The velocity after t seconds is given by
$V = 3t^2 - 6t - 8$.
The distance of the particle from the origin after one second is 10 metres. Calculate the distance of the particle from the origin after 2 seconds.

SECTION II (48 Marks)

Answer any six questions from this section

17. The cost of a minibus was Kshs. 950,000. It depreciated in value by 5% per year for the first two years by 15% per year for the subsequent years.
(a) Calculate the value of the minibus after 5 years

(b) After 5 years the minibus was sold through a dealer at 25% more than its value to Mr. X. If the dealers sale price was to be taken as its value after depreciation, calculate the average monthly rate of depreciation for 5 years.

18. A triangle plot of land ABC is such that AB= 34 m, AC=66m and BAC = 96.70
(a) Calculate the length of BC

(b) In order to subdivide the plot, a fencing post P is located on BC such that BP: PC = 1:3.
Calculate the area of the plot ABC and hence find the area of the triangular subdivision APB.

(c) A water pipe running though the subdivision APB is parallel to AB and divides the area in the ratio 4:5 where the bigger portion is a trapezium.

Calculate the distance of the pipe from P.

19. The figure below shows two circle ABPQ and ABSR intersecting at A and B. PBS, QART and ABU are straight lines. The line UST is a tangent to a circle ABSR at S.
$\angle BPQ = 80^0$, $\angle PBU = 115^0$ and $\angle BUS = 80^0$

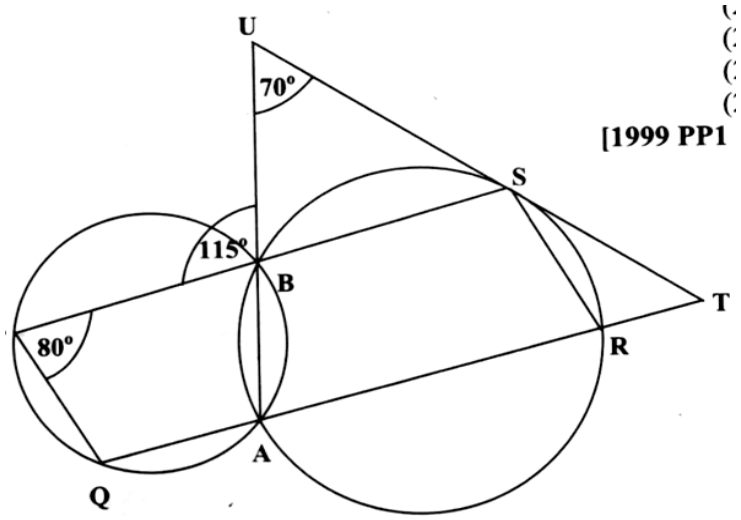

[1999 PP1

Find the values of the following angles, stating your reason in each case.

(a) ∠ BAR

(b) ∠ STR

(c) ∠ BSU

20. (a) Complete the following table for the equation $y = x^3 - 5x^2 + 2x + 9$

x	-2	-1.5	-1	0	1	2	3	4	5
x^2		-3.4	-1	0	1		27	64	125
$-5x^2$	-20	-11.3	-5	0	-1	-20	-45		
2x	-4	-3		0	2	4	6	8	10
9	9	9	9	9	9	9	9	9	99
		-8.7			9	7		-3	

(b) On the grid provided draw the graph of $y = x^3 - 5x^2 + 2x + 9$ for $-2 \leq x \leq 5$

(c) Using the graph estimate the root of the equation $x^3 - 5x^2 + 2 + 9 = 0$ between x = 2 and x = 3

(d) Using the same axes draw the graph of $y = 4 - 4x$ and estimate a solution to the equation $x^2 - 5x^2 + 6x + 5 = 0$

21. In triangle OAB, OA = a OB = b and P lies on AB such that AP: BP = 3.5

(a) Find the terms of a and b the vectors

(i) AB (ii) AP (iii) BP (iv) OP

(b) Point Q is on OP such $AQ = \frac{-5a}{8} + \frac{9b}{40}$

Find the ratio OQ: QP

22. If $x^2 + y^2 = 29$ and $x + y = 3$

(a) Determine the values of

(i) $x^2 + 2xy + y^2$

(ii) $2xy$

(iii) $X^2 - 2xy + y^2$

(iv) $X - y$

(b) Find the value of x and y

23. The diagram below shows a cross- section of a bottle. The lower part ABC is a hemisphere of radius 5.2 cm and the upper part is a frustrum of a cone. The top radius of the frustrum is one third of the radius of the hemisphere. The hemisphere part is completely filled water as shown in the diagram.

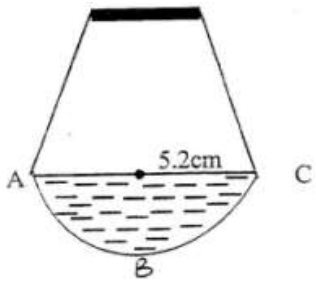

When the container is inverted, the water now completely fills only the frustrum part.

(a) Determine the height of the frustrum part

(b) Find the surface area of the frustrum part of the bottle.

24. The graph below consists of a non- quadratic part ($0 \leq x \leq 2$) and a quadrant part ($2 \leq x$ 8) The quadratic part is $y = x^2 - 3x + 5$, $2 \leq x \leq 8$

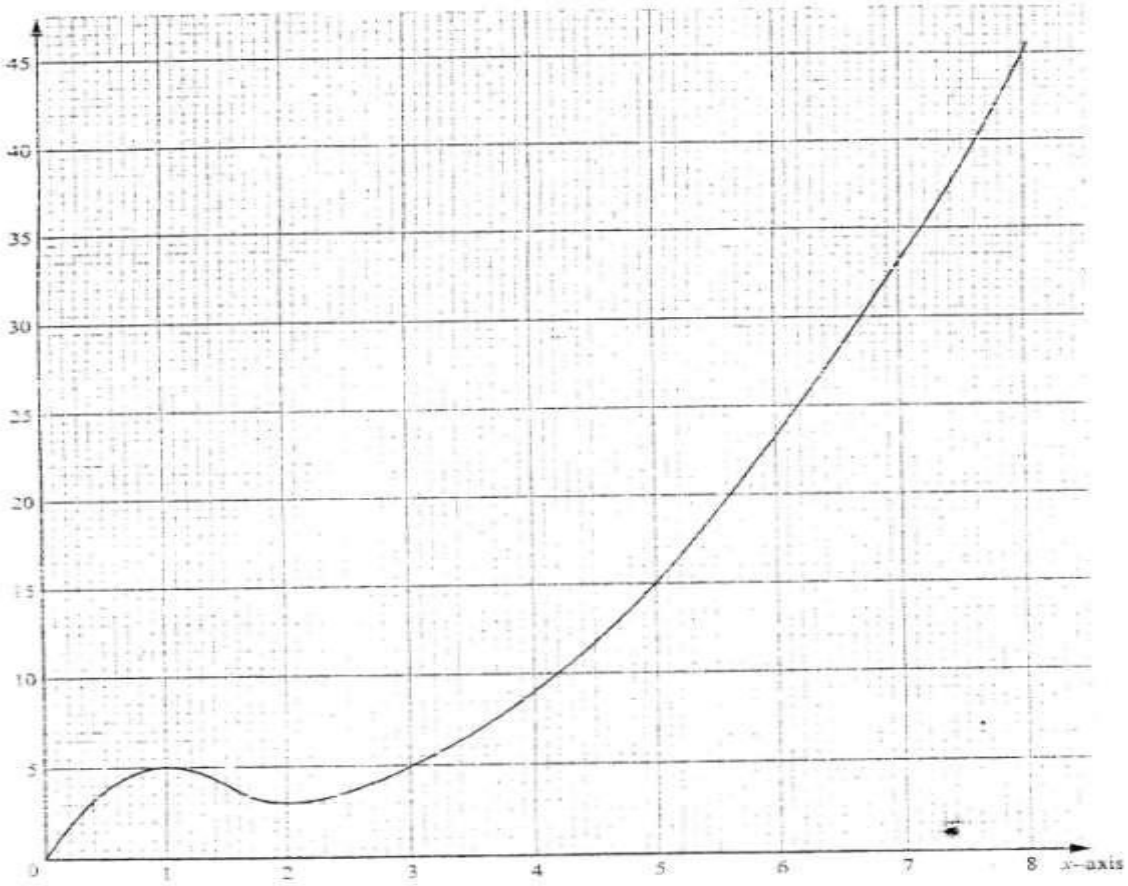

(a) Complete the table below

x	2	3	4	5	6	7	8
y	3						

(1 mk)

(b) Use the trapezoidal rule with six strips to estimate the area enclosed by the curve, x = axis and the line x = 2 and x = 8 (3 mks)

(c) Find the exact area of the region given in (b) (3 mks)

(d) If the trapezoidal rule is used to estimate the area under the curve between x = 0 and x = 2, state whether it would give an under- estimate or an over- estimate.
Give a reason for your answer (1 mk)

MATHEMATICS

K.C.S.E PAPER 121/ 1 2000

QUESTIONS

SECTION 1 (52 Mks)

Answer all the questions in this section

1. Evaluate $\frac{28 - (-18)}{-2} - \frac{15 - (-2)(-6)}{-3}$

2. Simplify the expression $\frac{3a^2 + 4ab + b^2}{4a^2 + 3ab - b^2}$

3. In the figure below ABCD is a rectangular pentagon and M is the midpoint of AB. DM intersects EB at N.

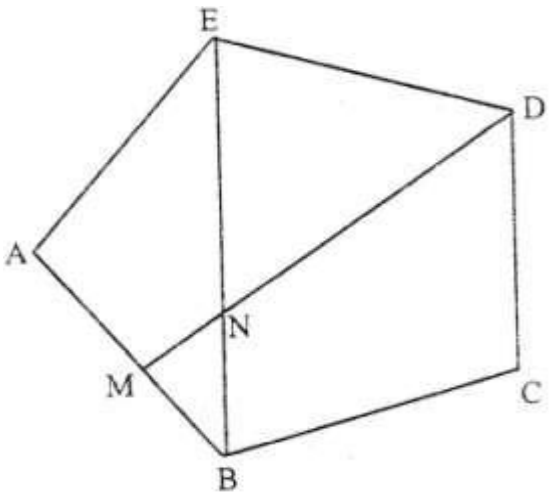

Find the size of: (a) $\angle$ BAE

(b) $\angle$ BED

(c) $\angle$ BNM

4. The table below shows heights of 50 students

Height (cm)	Frequency
140 – 144	3
145 – 149	15
150- 154	19
155- 159	11
160-164	2

(a) State the modal class

(b) Calculate the median height

5. Find the value of x that satisfies the equation
   Log (x + 5) = log 4 – log (x + 2)

6. The enclosed region shown in the figure below represent a ranch drawn to scale. The actual area of the ranch is 1075 hectares.

   (a) Estimate the area of the enclosed region in square centimeters

   (b) Calculate the linear scale used

7. Given that $\sin\theta = {}^{2}/_{3}$ and is an acute angle find:
   (a) Tan θ giving your answer in surd form

   (b) $\text{Sec}^2\,\theta$

8. Shopping centers X, Y and Z are such that Y is 12 km south of X and Z is 15 km from X.Z is on a bearing of 330^0 from Y.

9. The figure below shows an octagon obtained by cutting off four congruent triangles from rectangle measuring 19.5 by 16.5 cm

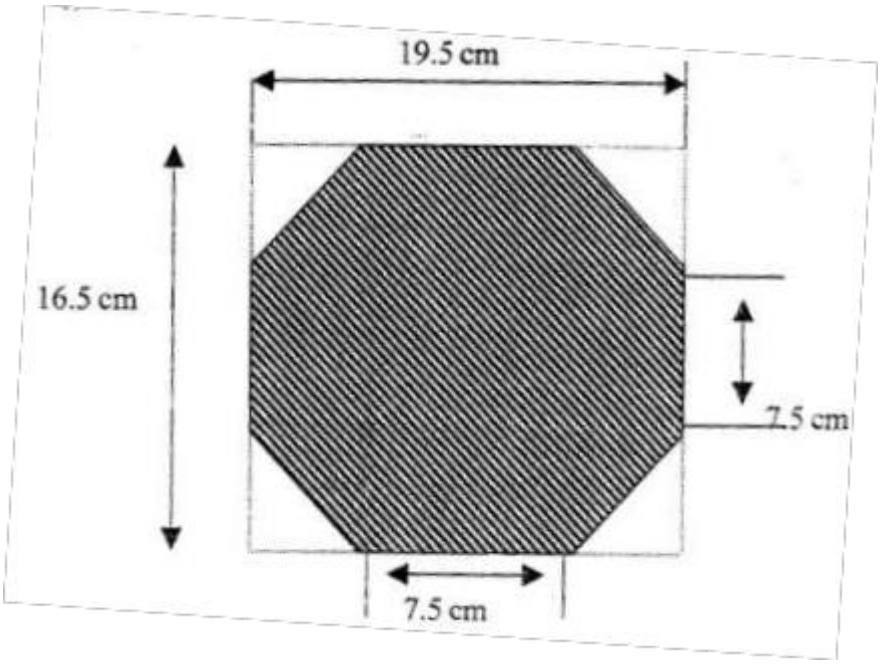

Calculate the area of the octagon

10. The length and breath of a rectangular paper were measured to be the nearest centimeter and found to be 18cm and 12 cm respectively.
Find the percentage error in its perimeter.

11. A pyramid VABCD has a rectangular horizontal base ABCD with AB= 12 cm and BC = 9cm.
The vertex V is vertically above A and VA = 6cm. calculate the volume of the pyramid.

12. A tailor intends to buy a sewing machine costs Kshs. 48,000. He borrows the money from a bank the loan has to be repaid at the end of the second year. The bank charges an interest at the rate of 24% per annum compounded half - yearly. Calculate the total amount payable to the bank.

13. On The figure below lines ABC and DC are tangents to the circle at B and D Respectively $\angle ACD = 40^0$ and $\angle ABE = 60^0$

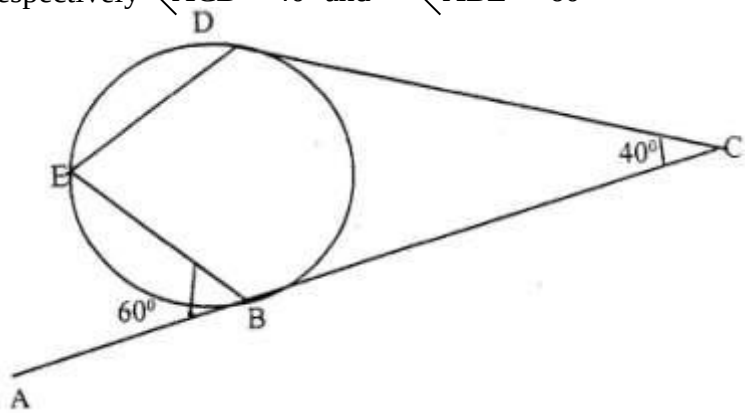

Giving reasons find the size of:

(a) <CBD

(b) $\angle$ CDE

14. The acceleration a m/s^2 of a particle moving in a straight line is given by a = 18t - 4, where t is time in seconds. The initial velocity of the particle is 2 m/s

(a) Find the expression for velocity in terms of t

(b) Determine the time when the velocity is again 2m/s

15. Three people Korir, Wangare and Hassan contributed money to start a business. Korir contributed a quarter of the total amount and Wangare two fifths of the remainder. Hassan‘s contribution was one and a half times that of Korir. They borrowed the rest of the money from the bank which was Kshs 60, 000 less than Hassan‘s contribution, find the total amount required to start the business.

16. Karani bought 4 pencils and 6 biro- pens for Kshs 66b and Tachora bought 2 pencils and 5 biro- pens for Kshs 51.

(a) Find the price of each item

(b) Musoma spent Kshs. 228 to buy the same type of pencils and biro pens. If the number of biro- pens he bought were 4 more than the number of pencils, find the number of pencils bought.

SECTION II (48 Mks)

Answer any six questions from this section

17. A triangular plot ABC is such that AB = 36m, BC = 40m and AC = 42 m

(a) Calculate the:

(i) Area of the plot in square metres

(ii) Acute angle between the edges AB and bc

(b) A water tap is to be installed inside the plot such that the tap is equidistant from each of the vertices A, B and C. Calculate the distance of the tap.

18. In form 1 class there are 22 girls and boys. The probability of a girl completing the secondary education course is 3 whereas that of a boy is $^{2}/_{3}$

(a) A student is picked at random from class. Find the possibility that,

(i) The student picked is a boy and will complete the course

(ii) The student picked will complete the course

(b) Two students are picked at random. Find the possibility that they are a boy and a girl and that both will not complete the course.

19. (a) Complete the table below for the equation $y = 2x^3 + 5x^2 – x -6$

x	-4	-3	-2	-1	0	1	2
$2x^3$	-128	-54			0	2	16
$5x^3$	80	45	20	5	0	5	20
-x	4	3		0	-1		
-6	-6	-6	-6	-6	-6	-6	-6
y	-50		2	-6	0		

(b) On the grid provided draw the graph $y = 2x^3 + 5x^2 –x -6$ for $-4 \leq x \leq 2$

(c) By drawing a suitable line use the graph in (b) to solve the equation
$2x^3 + 5x^2 + x – 4 = 0$

20. A solid made up of a conical frustrum and a hemisphere top as shown in the figure below. The dimensions are as indicated in the figure.

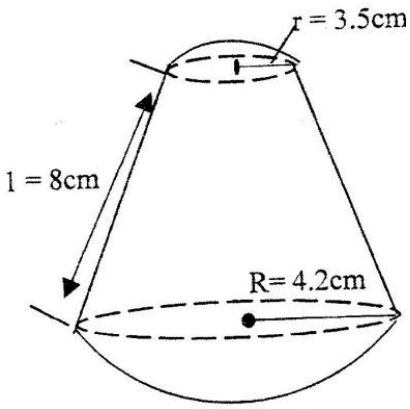

(a) Find the area of
(i) The circular base
(ii) The curved surface of the frustrum
(iii) The hemisphere surface

(b) A similar solid has a total area of 81.51 cm^2. Determine the radius of its base.

21. The figure below shows triangle OAB in which M divides OA in the ratio 2: 3 and N divides OB in the ratio 4:1 AN and BM intersect at X

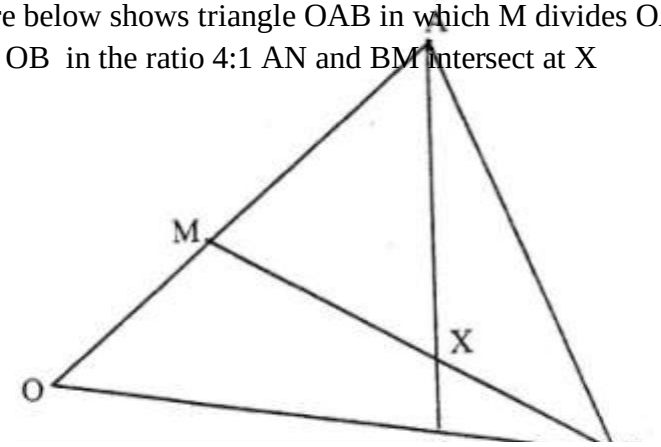

(a) Given that OA = a and OB = b, express in terms of a and b:
   (i) AN
   (ii) BM

(b) If AX = s AN and BX = tBM, where s and t are constants, write two expressions for OX in terms of a,b s and t
   Find the value of s
   Hence write OX in terms of a and b

22. A plane leaves an airport A (38.5^0, 37.05^0W) and flies dues North to a point B on latitude 52^0N.

(a) Find the distance covered by the plane

(b) The plane then flies due east to a point C, 2400km from B. Determine the position of C
   Take the value ∏ of as $^{22}/_7$ and radius of the earth as 6370 km

23. Matrix p is given by $\begin{pmatrix} 4 & 7 \\ 5 & 8 \end{pmatrix}$

(a) Find P^{-1}

(b) Two institutions, Elimu and Somo, purchase beans at Kshs. B per bag and maize at Kshs m per bag. Elimu purchased 8 bags of beans and 14 bags of maize for Kshs 47,600. Somo purchased 10 bags of beans and 16 of maize for Kshs. 57,400

(c) The price of beans later went up by 5% and that of maize remained constant. Elimu bought the same quantity of beans but spent the same total amount of money as before on the two items. State the new ratio of beans to maize.

24. (a) Complete the table for the equation
$Y = 2 \sin (3x + 30^0)$

X	0^0	10^0	20^0	30^0	40^0	50^0	60^0	70^0	80^0	90^0
$3x + 30^0$	30	60	90	120	150	180	210	240	270	300
$Y=2 \sin (3x + 30^0$	1	1.73	2			0			-2	-1.73

(b) Using the grid provided, draw the graph of $y = 2 \sin (3x + 30^0)$ for $0 \leq x \leq 90^0$
Take 1 cm to represent 50 on the x- axis and 2 cm to represent I unit on the y- axis

(c) Use the graph in (b) to find the range of x that satisfy the inequality y^3 1.6

MATHEMATICS

K.C.S.E PAPER 121/ 1 2001

QUESTIONS

SECTION 1 (52 Mks)

Answer all the questions in this section

1. Find the reciprocal of 0.342. Hence evaluate:

$$\frac{\sqrt{0.0625}}{0.342}$$

2. The figure below represents a kite ABCD, AB = AD = 15 cm. The diagonals BD and AC intersect at O. AC = 30 cm and AO = 12 cm.

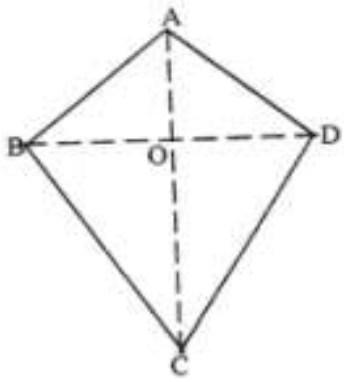

Find the area of the kite

3. Use logarithms to evaluate

$(3.256 \times 0.0536)^{1/3}$

4. The diagram below represents a solid made up of a hemisphere mounted on a cone. The radius of the hemisphere are each 6 cm and the height of the cone is 9 cm.

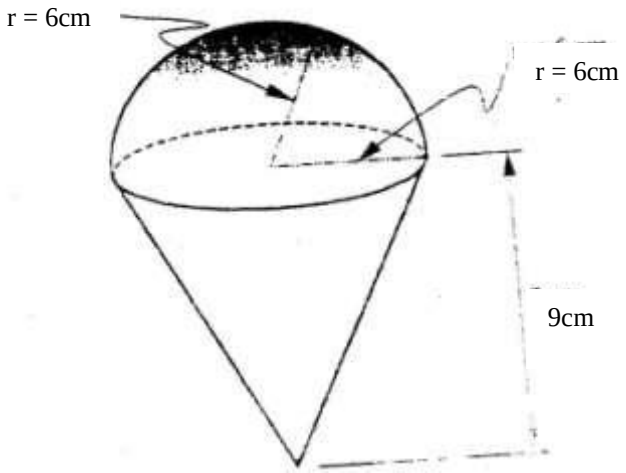

Prefer Calling Sir Obiero Amos @ 0706 851 439 for the Marking Schemes

5. A line L_1 passes though point (1,2) and has a gradient of 5. Another line L_2, is perpendicular to L_1 and meets it at a point where x = 4. Find the equation for L_2 in the form of y = mx + c

6. Simplify the expression $\frac{3x^2 - 4xy - y^2}{9x^2 - y^2}$

7. The length of a room is 4 metres longer its width. Find the length of the room if its area is $32cm^2$

8. Use a ruler and compasses in this question. Draw a parallegram ABCD in which AB = 8 cm, BC = 6 cm and BAD = 75^0. By construction, determine the perpendicular distance between AB and CD.

9. A poultry farmer vaccinated 540 of his 720 chickens against a disease. Two months later, 5% of the vaccinated and 80% of the unvaccinated chicken, contracted the disease. Calculate the probability that a chicken chosen random contacted the disease.

10. Make x the subject of the formula

$$S = w\sqrt{a^2 - x^2}$$

11. A particle is projected from the origin. Its speed was recorded as shown in the table below

Time (sec)	0	5	10	15	20	25	39	35
Speed (m/s)	0	2.1	5.3	5.1	6.8	6.7	4.7	2.6

Use the trazezoidal rule to estimate the distance covered by the particle within the 35 seconds

12. Given that $\sin(x + 30)^0 = \cos 2x^0$ for 0^0, $0^0 \leq x \leq 90^0$ find the value of x. Hence find the value of $\cos {}^2 3x^0$.

13. Given that $P = \begin{pmatrix} 2 & 3 \\ 1 & 2 \end{pmatrix}$ and $Q = \begin{pmatrix} 2 & -3 \\ 1 & 2 \end{pmatrix}$, find the matrix product PQ

Hence, solve simultaneous equations below:

$2x - 3y = 5$

$-x + 2y = -3$

14. The interior angles of the hexagon are $2x^0$, ½ $x^0 + 40^0$, 110^0, 130^0 and 160^0. Find the value of the smallest angle

15. A town N is 340 km due west of town G and town K is due west of town N. A helicopter Zebra left G for K at 9.00 am. Another helicopter Bufalo left N for K at 11.00 am. Helicopter Buffalo traveled at an average speed of 20 km/ h faster than Zebra. If both helicopters reached K at 12.30 pm find the sped of helicopter Buffalo.

16. The position vectors for points P and Q are 4 I + 3 j + 6 j + 6 k respectively. Express vector PQ in terms of unit vectors I, j and k. Hence find the length of PQ, leaving your answer in simplified form.

SECTION II (48 Marks)
Answer any six questions in this section

17. The table shows income tax rates

Monthly taxable pay	Rate of tax Kshs in 1 K£
1 – 435	2
436 – 870	3
871-1305	4
1306 – 1740	5
Excess Over 1740	6

A company employee earn a monthly basic salary of Kshs 30,000 and is also given taxable allowances amounting to Kshs 10, 480.

(a) Calculate the total income tax
(b) The employee is entitled to a personal tax relief of Kshs 800 per month. Determine the net tax.
(c) If the employee received a 50% increase in his total income, calculate the corresponding percentage increase on the income tax.

18. The coordinates of the vertices of rectangle PQRS are P (1,1), Q (6,1), R (6,4)

and S(1,4)

(a) (i) Find the coordinates of its image P‖Q‖R‖S‖ of P‘Q‘R‘S under the transformation given by the matrix $\begin{pmatrix} 1 & -2 \\ 0 & 1 \end{pmatrix}$

(ii) Draw the object and its image on the grade provide

(iii) On the same grid draw the image. P‖ Q‖R‖ S‖ of P‘ Q‘ R‘ S‘ under the transformation given by $\begin{pmatrix} 0 & 1 \\ -1 & 0 \end{pmatrix}$

(b) Find a single matrix which will map P‖ Q‖ R‖ S‖ onto P‘R‘S‘Q‘

19. The figure below shows a parallelogram OPQR with O as the origin, OP = p and OR = r, Point T divides RQ in the ratio 1: 4 PT Meets OQ at S.

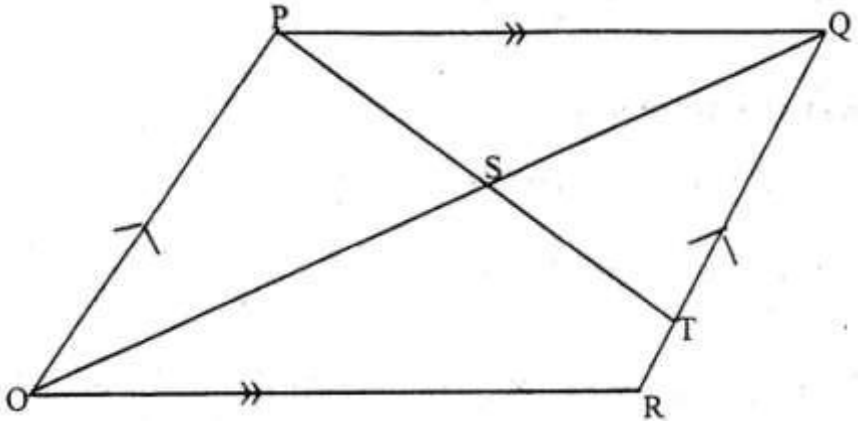

(a) Express in terms of p and r the vectors

(i) OQ

(ii) OT

(b) Vector OS can be expressed in tow ways: mOQ or OT + n TP, Where m and n are constants express OS in terms of

(i) m, n and r

(ii) n, s and r Hence find the:

(iii) Value on m

(iv) Ratio OS: SQ

20. In the figure below, points O and P are centers of intersecting circles ABD and BCD respectively. Line ABE is a tangent to circle BCD at B. Angle BCD = 42^0

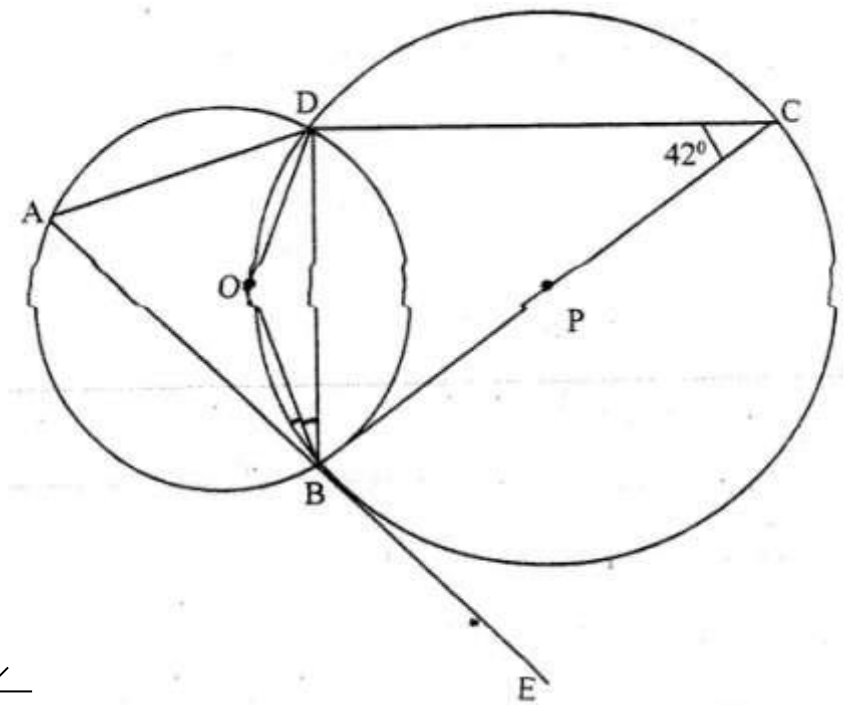

(a) Stating reasons, determine the size of

∠ (i) <GBD

(ii) Reflex <BOD

(b) Show that Δ ABD is isosceles

21. (a) The gradient function of a curve is given by $\frac{dy}{} = 2x^2 - 5\ dx$
Find the equation of the curve, given that y = 3, when x = 2

(b) The velocity, vm/s of a moving particle after seconds is given:
$v = 2t^3 + t^2 - 1$. Find the distance covered by the particle in the interval $1 \leq t \leq 3$

22. (a) Complete the following table for the equation $y = x^3 + 2x^3$

x	-3	-2.5	-2	-1.5	-1	-0.5	0	1	1.5
x^3	-27		-8	-3.375	-1	0.125	0	0.125	3.375
$2x^2$	18		8	4.5	2	0.5	0	0.5	4.5
y	-9		0	1.125	1	0.375	0	0.625	7.875

(b) On the grid provided draw the graph $y = x^3 + 2x^2$ for $-3 \leq x \leq 1.5$
Take the scale: 2cm for 1 unit on the X- axis and 1 cm for 1 unit on y – axis

(c) By drawing a suitable line on the same grid, Estimate the roots of the equation:
$X^3 + 2x^2 – x – 2 =0$

23. The probability of three darts players Akinyi, Kamau, and Juma hitting the bulls eye are 0.2, 0.3 and 1.5 respectively.

(a) Draw a probability tree diagram to show the possible outcomes

(b) Find the probability that:
(i) All hit the bulls eye
(ii) Only one of them hit the bulls eye
(iii) at most one missed the bull‘s eye

24. A plane flying at 200 knots left an airport A (30^0S, 31^0E) and flew due North to an airport B (30^0 N, 31^0E)

(a) Calculate the distance covered by the plane, in nautical miles

(b) After a 15 minutes stop over at B, the plane flew west to an airport C (30^0N, 13^0E) at the same speed.
Calculate the total time to complete the journey from airport C, though airport B.

MATHEMATICS

K.C.S.E PAPER 121/ 1 2002

QUESTIONS

1. Evaluate: $\frac{-12-(-3)\times-(-20)}{-6\times6\div3+-(-6)}$ (3mks)

2. Simplify: $(x + 2y)^2 - (x- 2y)^2$ (3mks)

3. Make y the subject of the formula p = $\frac{xy}{x-y}$

4. The position vectors of points X and Y are x=2i + j – 3k and y =3i + 2j -2k. Respective. Find XY

5. Use reciprocal and square tables to evaluate, to 4 significant figures, The expression:

6. The figure below is a polygon in which AB = CD = FA = 12cm BC = EF = 4cm and BAF =- CDE = 120^0. AD is a line of symmetry.

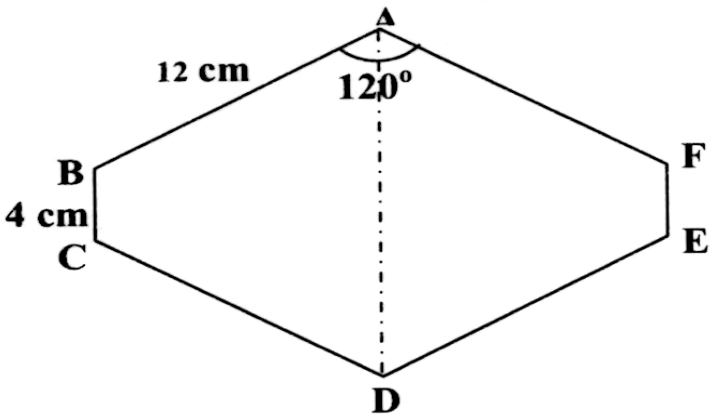

Find the area of the polygon.

7. A kenyan tourist left Germany for Kenya through Switzerland. While in Switzerland he bought a watch worth 52 deutsche Marks. Find the value of the watch in:
   (a) Swiss Francs.
   (b) Kenya Shillings

   Use the exchange rtes below:
   1 Swiss Franc = 1.28 Deutsche Marks. (3mks)
   1 Swiss Franc = 45.21 Kenya Shillings

Prefer Calling Sir Obiero Amos @ 0706 851 439 for the Marking Schemes

8. Solve the following inequalities and represent the solutions on a single number line:

$3 - 2x < 5$

$4 - 3x \geq -8$ (3mks)

9. The average rate of depreciation in value of a water pump is 9% per annum. After three complete years its like value was sh 150,700. Find its value at the start of the three – year period. (4mks)

10. The figure below shows a triangle ABC.

a) Using a ruler and a pair of compasses, determine a point D on the line BC such that BD:DC = 1:2. (2mks)

b) Find the area of triangle ABD, given that AB = AC. (2mks)

11. The internal and external diameters of a circular ring are 6cm and 8cm respectively. Find the volume of the ring if its thickness is 2 millimeters. (3mks)

12. Chords XY and PQ of a circle intersect at a point M inside the circle. Given that MX = 8cm, XY = 14cm and MP = 4cm, calculate the length of MQ. (2mks)

13. Given that $\sin a = \frac{1}{\sqrt{5}}$ where a is an acute angle find, without using Mathematical tables: cos a in the form of $a\sqrt{b}$, where a and b are rational numbers atan $(90^0 - a)$.

14. A quantity P is partly constant and partly varies inversely as a quantity q. Given that P=10 when p = 20 when q = 1.25, find the value of p when q = 0.5.

15. The table below shows the weight and price relatives of four items in a given period.

Item	weight	Price relative
Maize meal	6	220
Meat Sugar	3	120
Cooking fats	4	180
	2	150

Compute the cost of living index for the given items.

16. Given the curve $y = 2x^3 + 1/2x^2 - 4x + 1$. Find the:

i) Gradient of curve at $\{1, -{}^1/_2\}$

ii) Equation of the tangent to the curve at $\{1, -{}^1/_2\}$

17. A house is to be sold either on cash basis or through a loan. The cash price is sh.750,000. The loan conditions area s follows: there is to be down payment of 10% of the cash price and the rest of the money is to be paid through a loan at 10% per annum compound interest.
A customer decided to but the house through a loan.

a) (i) Calculate the amount of money loaned to the customer.

(ii) The customer paid the loan in 3 year's. Calculate the total amount paid for the house.

b) Find how long the customer would have taken to fully pay for the house if she paid a total of sh 891,750. (8mks)

18. The figure below represents a right prism whose triangular faces are isosceles. The base and height of each triangular face are 12cm and 8cm respectively. The length of the prism is 20cm.

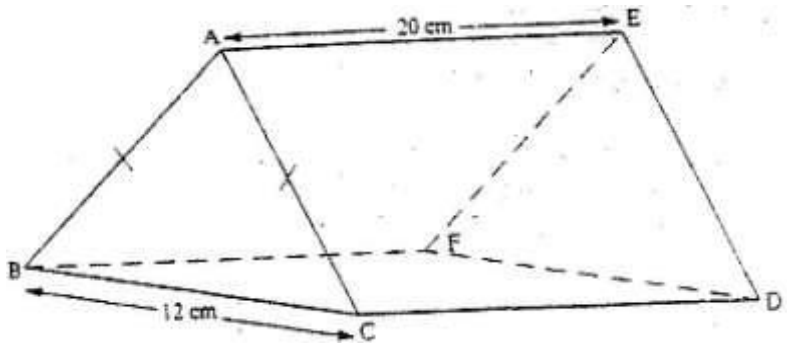

Calculate the:

a) Angle CE

b) Angle between

i) The line CE and the plane BCDF

ii) The plane EBC and the base BCDF

b) During a certain motor rally it is predicted that the weather will be either dry (D) or wet (W).

The probability that the weather will be dry is estimated to be $^{7}/_{10}$. The probability for a driver to complete (C) the rally during the dry weather is estimated to be $^{5}/_{6}$. The probability for a driver to complete the rally during wet weather is estimated to be $^{1}/_{10}$.

Complete the probability tree diagram given below.

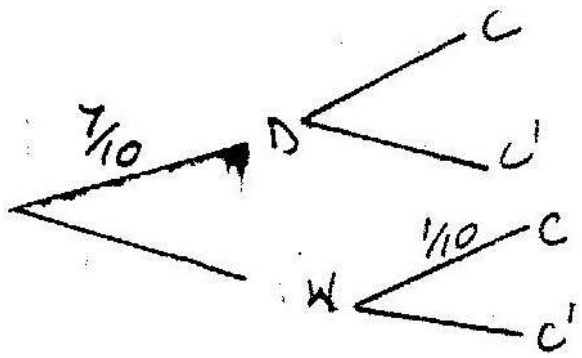

What is the probability that:-

i) The driver completes

ii) The weather was wet and the driver did not complete the rally?

20. The diagram below shows a straight line intersecting the curve y = (x-1)2 + 4 At the points P and Q. The line also cuts x-axis at (7,0) and y axis at (0,7)

a) Find the equation of the straight line in the form y = mx +c.

b) Find the coordinates of p and Q.

c) Calculate the area of the shaded region. (8mks)

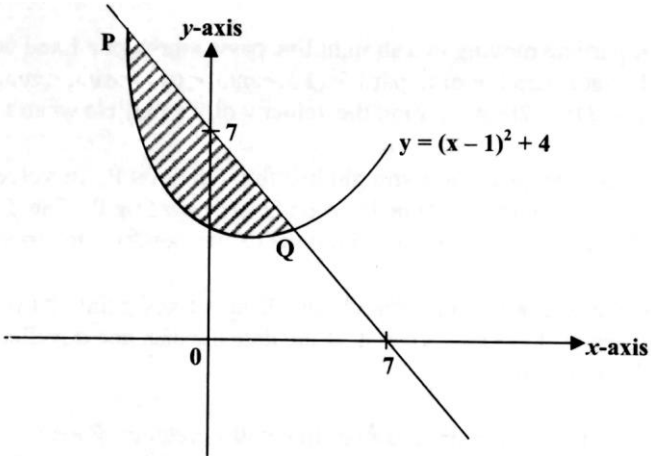

21. In this question use a ruler and a pair of compasses.

a) Line PQ drawn below is part of a triangle PQR. Construct the triangle PQR in which

a) < QPR = 300 and line PR = 8cm

b) On the same diagram construct triangle PRS such that points S and Q are no the opposite sides of PR<PS = PS and QS = 8cm

c) A point T is on the a line passing through R and parallel to QS.If <QTS =90^0, locate possible positions of T and label them T^1 and T^2, Measure the length of T^1T^2.

22. A triangle T whose vertices are A (2,3) B(5,3) and C (4,1) is mapped onto triangle T^1 whose vertices are A^1 (-4,3) B^1 (-1,3) and C^1 (x,y) by a Transformation $M = \begin{pmatrix} a & b \\ c & d \end{pmatrix}$

Find the:

(i) Matrix M of the transformation

(ii) Coordinates of C_1

b) Triangle T^2 is the image of triangle T^1 under a reflection in the line y = x. Find a single matrix that maps T and T^2 (8mks)

23. A minor sector of a circle of radius 28cm includes an angle of 135^0 at the center.

a) (i) convert 1350 into radians. Hence of otherwise find the area of the sector.

ii) Find the length of the minor arc.

b) The sector is folded to form a right circular cone. Calculate the :

i) Radius of the cone

ii) Height of the cone. (Take the value of Π to be $^{22}/_{7}$) (8mks)

24. Two quantities P and r are connected by the equation $p = kr^n$. The table of values of P and r is given below.

P	1.2	1.5	2.0	2.5	3.5	4.5
r	1.58	2.25	3.39	4.74	7.86	11.5

a) State a liner equation connecting P and r.

b) Using the scale 2cm to represent 0.1 units on both axes, draw a suitable line graph on the grid provided. Hence estimate the values of K and n. (8mks)

MATHEMATICS

K.C.S.E PAPER 121/ 1 2003

QUESTIONS

SECTION 1 (52 Marks)

1. Work out the following, giving the answer as a mixed number in its simplest form. (3mks)

$$\frac{\frac{2}{5} \div \frac{1}{2} of \frac{4}{9} - 1\frac{1}{10}}{\frac{1}{8} - \frac{1}{6} \times \frac{3}{8}}$$

2. Simplify the expression $\left(a + \frac{1}{b}\right)^2 - \left(a - \frac{1}{b}\right)^2$ (3mks)

3. Make c the subject of t formula: $T = x c^2 + d^2$ (3mks)

4. A water pump costs Kshs. 21600 when new. At the end of first year its value depreciates by 25%. The depreciation by the second year is 20% and thereafter the rate of the depreciation is 15% yearly. Calculate the exact value of the water pump at the end of the fourth year. (3mks)

5. In the figure below is the center of the circle ABCD and AOD in a straight line.

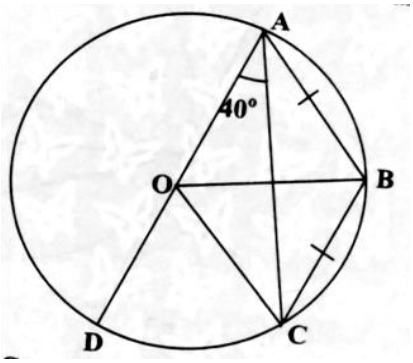

If AB = BC and angle DAC = 400, Calculate angle BAC. (3mks)

6. Give that x = 2i +j – 2k,y = - 3i +4j –k and z = - 5i +3j +2k and that p = 3x – y +2z. Find the magnitude of vector p to 3 significant figures. (4mks)

7. Solve the equation 3 tan2 x – 4 tan x -4 =0 for $0^0 \leq x \geq 180^0$ (4mks)

Prefer Calling Sir Obiero Amos @ 0706 851 439 for the Marking Schemes

8. Using a ruler and a pair of compasses only.

a) Construct triangle ABC in which BC = 8cm, angle ABC = 1050 and BAC =450

b) Drop a perpendicular from A to meet CB produced at p. Hence find the area of triangle ABC.

9. There are three cars A,B and C in a race. A is twice as likely to win as B while B is twice as likely to win as c. Find the probability that.

a) A wins the race

b) Either B or C win the race. (3mks)

10. The length of a solid prism is 10cm. Its cross section is an equilateral triangle of side 6cm.

Find the total surface area of the prism.

11. A wire of length 21cm is bent to form the shape down in the figure below, ABCD is a rectangle and AEB is an equilateral triangle. (2mks)

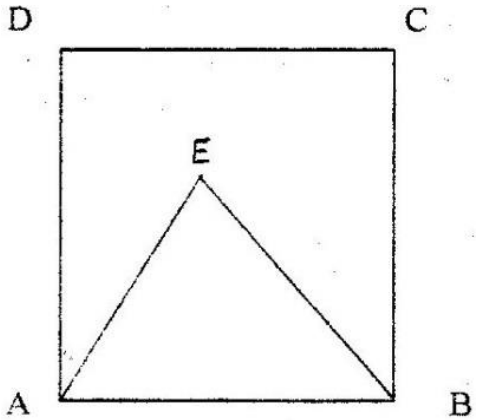

If the length of AD of the rectangle is 1 ½ times its width, calculate the width of the rectangle.

12. Two straight paths are perpendicular to each other at point p.One path meets a straight road at point A while the other meets the same road at B. Given that PA is 50 metres while PB is 60 metres. Calculate the obtuse angle made by path PB and the road.

13. The length of a hallow cylindrical pipe is 6metres. Its external diameter is 11cm and has a thickness of 1cm. Calculate the volume in cm3 of the material used to make the pipe. Take Π as 3.142.

14. a) Write an expression in terms of x and y for the total value of a two digit number having x as the tens digit and y as the units digit.

b) The number in (a^0 above is such that three times the sum of its digits is less than the value of the number by 8. When the digits are reversed the value of the number increases by 9. Find the number.

15. Three points O, A and B are on the same horizontal ground. Point A is 80 metres to the north of O. Point B is located 70 metres on a bearing of 060^0 from A. A vertical mast stands at point B. The angle of elevation of the top of the mast from o is 20^0.

Calculate:

a) The distance of B from O. (2mks)

b) The height of the mast in metres (2mks)

16. The velocity Vms-1 of particle in motion is given by $V = 3t^2 - t + 4$, where t is time in seconds.

Calculate the distance traveled by the particle between the time t=1 second and t=5 seconds.

17. A rectangular tank whose internal dimensions are 1.7m by 1.4m by 2.2m is three – quarters full of milk.

a) Calculate the volume of milk in the tank in cubic metres.

b) Pyramid on an equilateral triangular base of side 16cm. The height of each packet is 1.6cm. Full packets obtained are sold at sh.25 per packet.

i) The volume of milk in cubic centimeters, contained in each packet to 2 significant figures

ii) The exact amount that will be realized from the sale of all the packets of milk.

18. The mass of 40 babies in a certain clinic were recorded as follows:

Mass in Kg	No. of babies.
1.0 – 1.9	6
2.0 – 2.9	14
3.0 -3.9	10
4.0 – 4.9	7
5.0 – 5.9	2

6.0 – 6.9 1

Calculate

(a) The inter – quartile range of the data.

(b) The standard deviation of the data using 3.45 as the assumed mean.

19. The figure below shows two circles each of radius 7cm, with centers at X and Y. The circles touch each other at point Q.

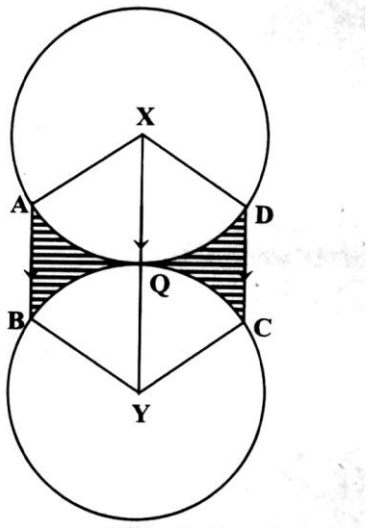

Give that AXD = BYC = 1200 and lines AB, XQY and DC are parallel, calculate the area of:

a) Minor sector XAQD (Take $\Pi\ ^{22}/_{7}$)

b) The shaded regions.

20. The diagram below is a sketch of the curve $y = x^2 + 5$.

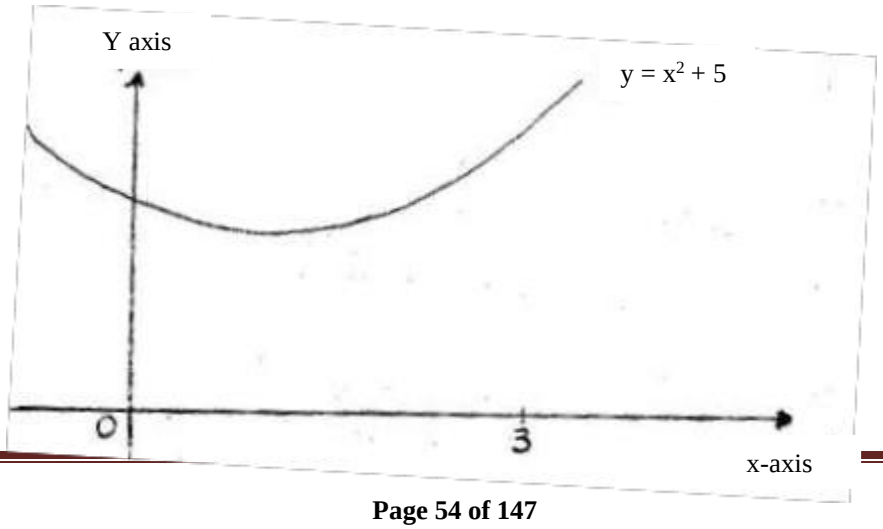

a) i) Use the mid –ordinate rule, with six strips to estimate the area enclosed by the curve, the x – axis and the y – axis and line x =3. (4mks)

ii) Calculate the same area using the integration method. (2mks)

b) Assuming the area calculated in (a) (ii) _____ calculate the percentage error made when the mid – ordinate rule is used.

21. In the figure below, vector OP = P and OR =r. Vector OS = 2r and OQ = $^{3}/_{2}$p.

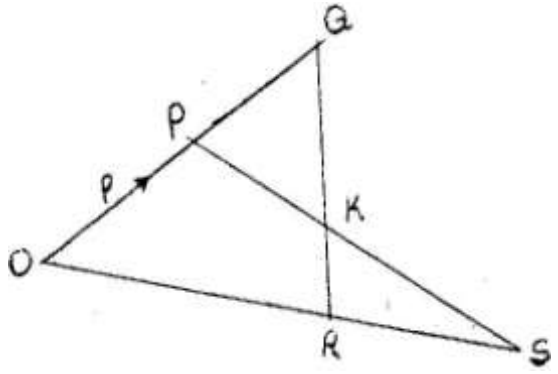

a) Express in terms of p and r
(i) QR and
(ii) PS

b) The lines QR and PS intersect at K such that QK = m QR and PK = n PS, where m and n are scalars. Find two distinct expressions for Ok in terms of P, r, m and n. Hence find the values of m and n. (5mks)

c) State the ratio PK:KS

22. Complete the table below, for function $y = 2x^2 + 4x - 3$

X	-4	-3	-2	-1	0	1	2
2x2	32		8	2	0	2	
4x - 3			-11		-3		5
y			-3			3	13

(b) On the grid provided, draw the graph of the function $y=2x^2 + 4x -3$ for $-4 \leq x \leq 2$ and use the graph to estimate the rots of the equation $2x^2+4x - 3 = 0$ to 1 decimal place. (2mks)

c) In order to solve graphically the equation $2x^2 +x -5 =0$, a straight line must be drawn to intersect the curve $y = 2x^2 + 4x - 3$. Determine the equation of this straight line, draw the straight line hence obtain the roots.

23. A businessman obtained a loan of sh.450,000 from a bank to buy a matatu valued at the same amount. The bank charges interest at 24% per annum compounded equation. $2x^2 + x - 5 = 0$ to 1 decimal place.

a) Calculate the total amount of money the businessman paid to clear the loan in 1 – ½ years.

b) The average income realized from the matatu per day was sh.1500. The matatu worked for 3 years at an average of 280 days year. Calculate the total income from the matatu.

c) During the three years, the value of the matatu depreciated at the rate of 16% per annum. If the businessman sold the matatu at its new value, calculate the total profit he realized by the end of three years. (3mks)

24. Two towns A and B lie on the same latitude in the northern hemisphere. When its 8am at A, the time at B is 11.00am.

a) Given that the longitude of A is 150 E find the longitude of B. (2mks)

b) A plane leaves A for B and takes 31/2 hours to arrive at B traveling along a parallel of latitude at 850km/h. Find:

(i) The radius of the circle of latitude on which towns A and B lie. (3mks)

(ii) The latitude of the two towns (take radius of the earth to be 6371km) (3mks)

MATHEMATICS

K.C.S.E PAPER 121/ 1 2004

QUESTIONS

SECTION 1(52 MKS)

Answer all the questions in this section

1. Without using logarithm tables evaluate

$$\frac{0.015 + 0.45 \div 1.5}{4.9 \times 0.2 + 0.07}$$

Giving the answer in decimal form.

2. The size of an interior angle of a regular polygon is 156^0.Find the number of sides of the polygon.

3. Simplify the expression $\dfrac{2a^2 - 3ab - 2b^2}{4a^2 - b^2}$

4. Given that OA = 3i -2j + and OB = 4i + j – 3k. Find the distance between points A and B to 2 decimal places.

5. The velocity V ms, of a moving body at time t seconds is given by $V = 5t^2 - 12t + 7$

6. Point C divided the line AB given below externally in the ratio 5:2

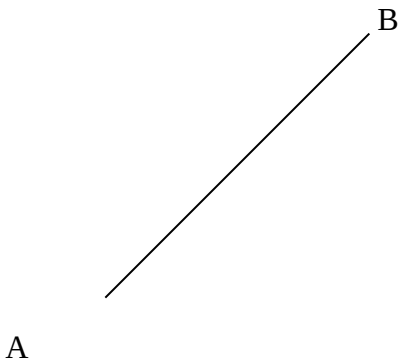

By construction, determine the position of point c

7. In the year 2003, the population of a certain district was 1.8 million. Thirty per cent of the population was in the age group 15 – 40 years. In the same year, 120,000 people in the district visited the Voluntary Counseling and Testing (VCT) centre for an HIV test.

If a person was selected at random from the district in this year. Find the probability that the person visited a VCT centre and was in the age group 15 – 60 years.

8. Use tables of reciprocals only to work out

$$\frac{3}{0.6735} + \frac{3}{0.156}$$

9. Give that xo is an angle in the first quadrant such that 8 sin 2x + 2 cos X -5=0
Find:
a) Cos x b) tan x

10. Omolo bought a new car for ksh. 800,000. After 5 years, he sold it through a second- hand car dealer. The dealer charged a commission of 4% for the sale of the car. If Omolo received Ksh.480, 000, calculate the annual rate of depreciation of the car.

11. The table below shows some values of the function $y = x^2 + 3$

X	0	1/2	1	$1^1/_2$	2	$2^1/_2$	3	$3^1/_2$	4	$4^1/_2$	5	$5^1/_2$	6
y	3		4	$5^1/_4$	7		12	$15^1/_4$	19		28		39

a) Complete the table

b) Use the mid – ordinate rule with six ordinates to estimate the area bounded by y = x ÷3, the y – axis, the x – axis and the line x = 6

12. In the figure below PQRS is a trapezium with SR parallel to PQSR = 5cm, RQ = 4cm, QS = 8cm and PQ = 10cm.

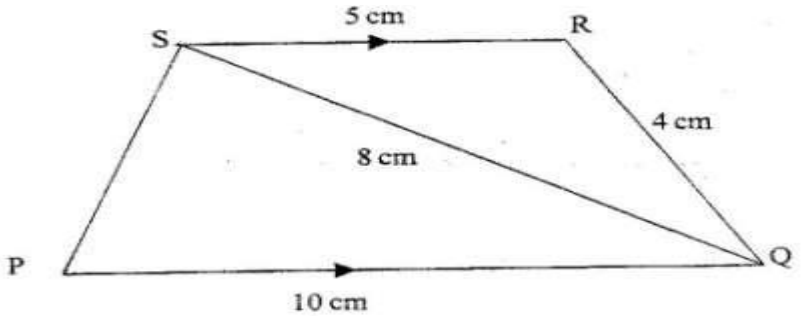

Calculate:

a) The size of angle QSR

b) The area of triangle PQS

13. The figure below represents a hexagon of side 5cm.

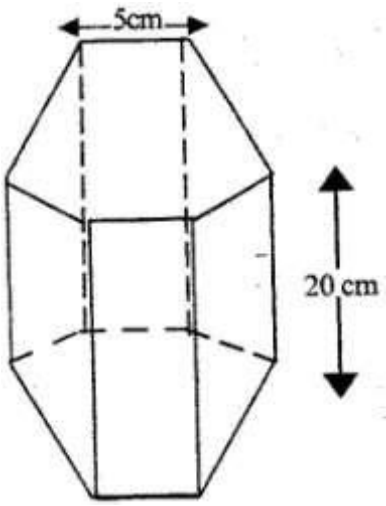

Find the volume of the prism.

14. The figure below shows a circle, centre, O of radius 7cm. TP and TQ are tangents to the circle at points P and Q respectively. OT =25cm.

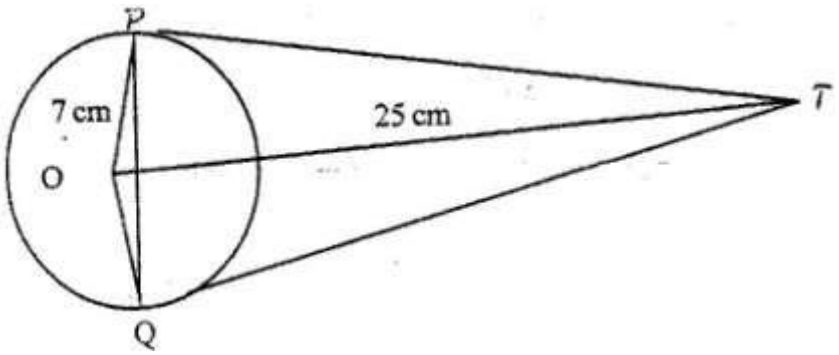

Calculate the length of the chord PQ

15. The figure below is a triangle XYZ. Using a pair of compasses and a ruler only, construct an inscribed circle such that the centre of the circle and the point x are the opposite sides of line yz

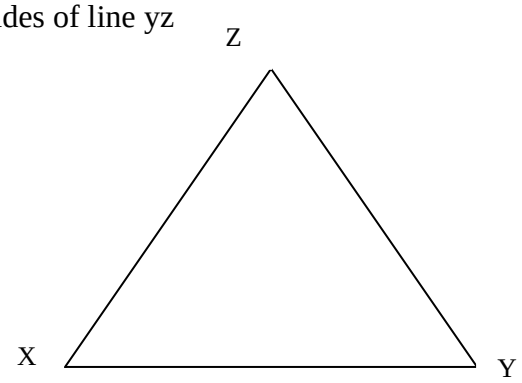

16. P(5,) and Q (-1,2) are points on a straight line. Find the equation of the perpendicular bisector of PQ: giving the answer in the form y = mx+c

.

SECTION II (48 MKS)

17. The table below shows monthly income tax rates for the year 2003.

Monthly taxable income in Ksh.	Tax rates(Percentage)
1-9860	10%
9681 – 18800	15%
27921 – 37040	20%
37041 and above	25%
	30%

In the year 2003.Ole Sanguya‘s monthly earnings were as follows:- Basic salary Ksh 20600

House allowance ksh 12000
Medical allowance Ksh 2880
Transport allowance Ksh 340.

Ole Sanguya was entitled to a monthly tax relief of Ksh 1056.

Calculate:

a) His monthly taxable income
b) The monthly tax paid by Ole Sanguya.

18. The equation of a curve is given $y = x^2 + 4x^2 - 2$

a) Determine the coordinates of the tuming points of the curve, correct to 1 decimal place.

b) Use the equation of the curve to complete the table below.

X	-4	-3	-2	-1	0	1
y	-2		6	1		

c) i) On the grid provided, use the solutions in part (a) and the values in the table in part (b) to draw the curve for $-4 < x < 1$.

ii) Use the graph to solve the equation $x^3 + 4x^2 - 2 = 0$

19. The figure below represents a model of a solid structure in the shape of a frustum of a cone with hemispherical top. The diameter of the hemispherical part is 70cm and is equal to the diameter of the top of the frustum. The frustum has a base diameter of 28cm and slant height of 60cm.

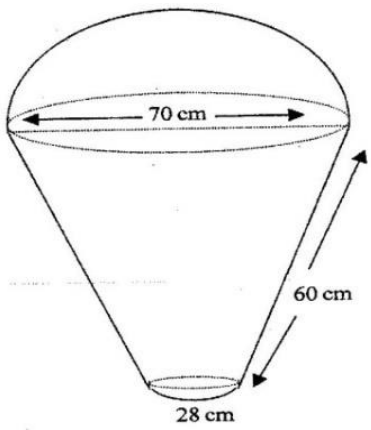

Calculate

a) The area of hemispherical surface.

b) The total surface area of the model.

20. The simultaneous equations below, are satisfied when x = 1 and y = p

$-3x + 4y = 5$

$qx^2 - 5xy + y^2 = 0$

a) Find the values of P and Q.

b) Using the value of Q obtained in (a) above, find the other values of x and y which also satisfy the given simultaneous equations.

21. a) If A,B and C are the points P and Q are p and q respectively is another point with position vector r = 3q -$^1/_2$ p.
Express in terms of p and q.
i) PR
ii) RQ hence show that P,Q and R are collinear.

iii) Determine the ratio PQ:QR.

22. In the figure below, K M and N are points on the circumference of a circle centre O. The points K, O, M and p are on a straight line.
PN is a tangent to the circle at N.Angle KOL = 130^0 and angle MKN = 40^0

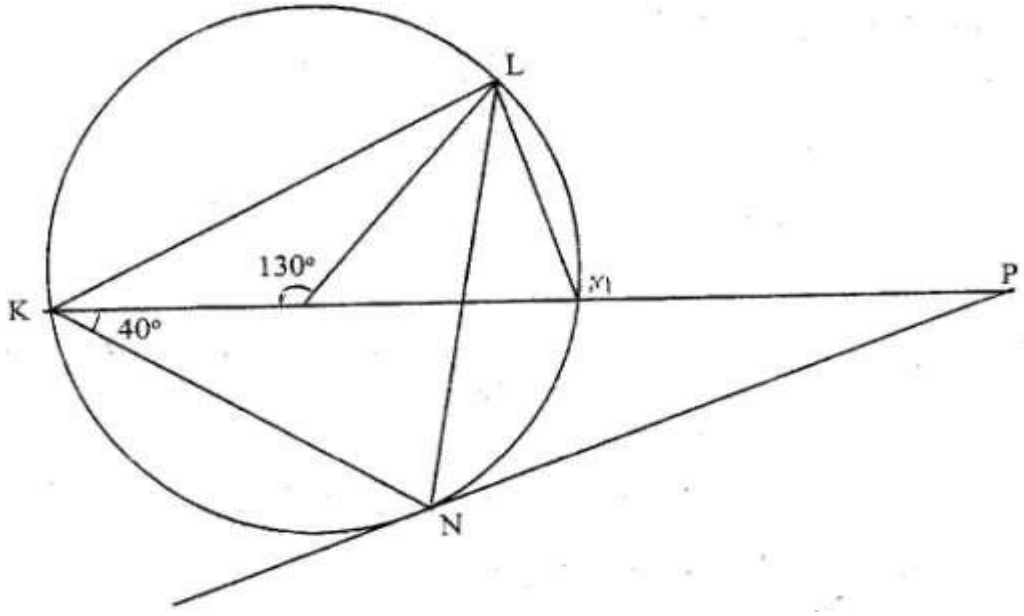

Find the values of the following angles, stating the reasons in each case:
a) <MLN b) <OLN c) < LNP d) <MPN

23. A triangular plot ABC is such that the length of the side AB is two thirds that of BC. The ratio of the lengths AB:AC = 4:9 and the angle at B is obtuse.
a) The length of the side BC

b) i) The area of the plot
iii) The size of <ABC

24. A man who can swim at 5km/h in still water swims towards the east to cross arriver. If the river flows from north to south at the rate of 3km/h

a) Calculate:

i) The resultant speed

ii) The drift

b) If the width of the river is 30m, find the time taken, in seconds, for the man to cross the river.

MATHEMATICS

K.C.S.E PAPER 121/ 1 2005

QUESTIONS

SECTION 1 (52 Marks)

Answer all the question in this section

1. Evaluate

$$\frac{\frac{3}{4} + 1\,{}^{5}/_{7} \div \text{of } 2\,{}^{1}/_{3}}{(1\,{}^{3}/_{7} - {}^{5}/_{8} \times {}^{2}/_{3})}$$ (3 mks)

2. Express the numbers 1470 and 7056, each as a product of its prime factors
   Hence evaluate

$$\frac{14702}{\sqrt{7056}}$$ Leaving the answer in prime form (3 mks)

3. The area of a rhombus is $60cm^2$. Given that one of its diagonals is 15 cm long, calculate the perimeter of the rhombus (3 mks)

4. Simplify the expression $\frac{9t^2-25a^2}{6t^2+19at+15a^2}$ (3 mks)

5. The size of each interior angle of a regular polygon is five times the size of the exterior angle. Find the number of sides of the polygon. (3mks)

6. A point R divides a line PQ internally in the ration 3:4. Another point S, divides the line PR externally in the ration 5:2. Given that PQ = 8cm, calculate the length of RS, correct to 2 decimal places. (3mks)

7. Given that $\sin (90 - x)^0 = 0.8$, where x is an acute angle, find without using mathematical tables the value of tan x0.

8. Two teachers are chosen randomly from a staff consisting 3 women and 2 men to attend a HIV/AIDs seminar. Calculate the probability that the two teachers chosen are:

   (a) Of the same sex
   (b) Of opposite sex

Prefer Calling Sir Obiero Amos @ 0706 851 439 for the Marking Schemes

9. In this question Mathematical Tables should not be used. The base and perpendicular height of a triangle measured to the nearest centimeter are 6 cm and 4 cm respectively.

Find

(a) The absolute error in calculating the area of the triangle (2mks)

(b) The percentage error in the area, giving the answer to 1 decimal place (2mks)

10. Make P the subject of the formula

$P^2 = (P - q)(P-r)$ (3 mks)

11. On the diagram below, the line whose equation is $7y - 3x + 30 = 0$ passes though the points A and B. Point A on the x- axis while point B is equidistant from x- and y – axes.

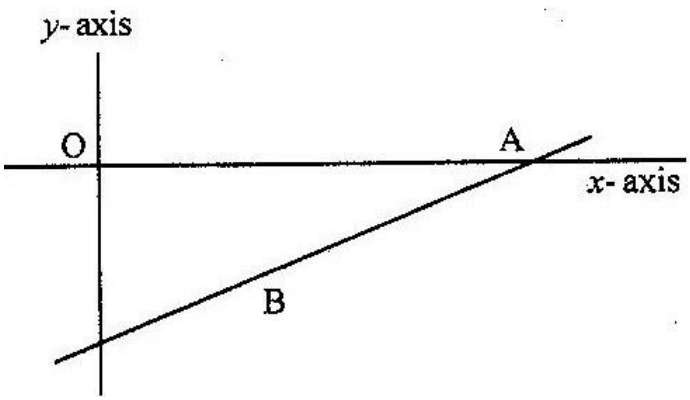

Calculate the co-ordinates of the points A and B (3mks)

12. A cylindrical piece of wood of radius 4.2 cm and length 150 cm is cut length into two equal pieces.

Calculate the surface area of one piece

(Take ∏ as 22/7) (4mks)

13. Point T is the midpoint of a straight line AB. Given the position vectors of A and T are i-j + k and 2i+ 1 ½ k respectively, find the position vector of B in terms of i, j \ and k. (3 mks)

14. The figure below shows a quadrilateral ABCD in which AB = 8 cm, DC = 12 cm, < BAD = 450, < CBD = 900 and BCD = 300.

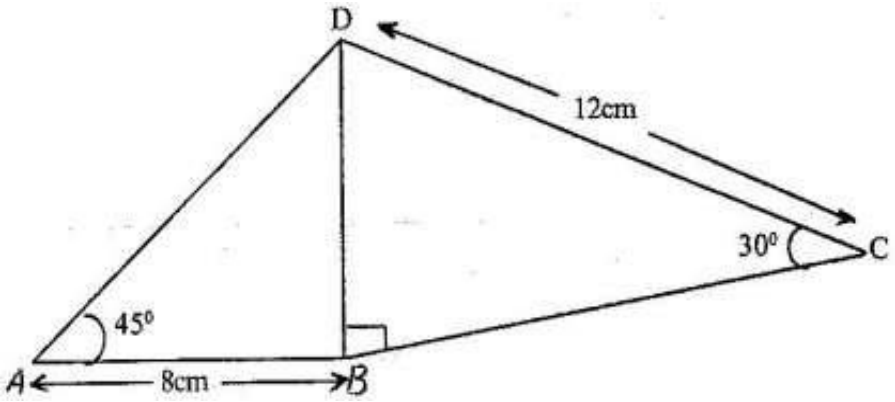

Find:

(a) the length of BD (1 mk)

(b) The size of the angle ADB (2 mks)

15. A bank either pays simple interest as 5% p.a or compound interest 5% p.a on deposits. Nekesa deposited Kshs P in the bank for two years on simple interest terms. If she had deposited the same amount for two years on compound interest terms, she would have earned Kshs 210 more.

Calculate without using Mathematics Tables, the values of P (4 mks)

16. The acceleration, a ms^{-2}, of a particle is given by $a = 25 - 9t^2$, where t in seconds after the particle passes fixed point O.

If the particle passes O, with velocity of 4 ms^{-1}, find

(a) An expression of velocity V, in terms of t (2 mks)

(b) The velocity of the particle when t = 2 seconds (2 mks)

SECTION II (48 mks)

Answer any six questions in this section

17. The distance between towns M and N is 280 km. A car and a lorry travel from M to N. The average speed of the lorry is 20 km/h less than that of the car. The lorry takes 1 h 10 min more than the car to travel from M and N.

(a) If the speed of the lorry is x km/h, find x (5 mks)

(b) The lorry left town M at 8: 15 a.m. The car left town M and overtook the lorry at 12.15 p.m calculate the time the car left town M.

18. The points P, Q, R and S have position vectors 2p, 3p, r and 3r respectively, relative to an origin
O. A point T divides PS internally in the ratio 1:6

(a) Find, in the simplest form, the vectors OT and QT in terms P and r (4 mks)

(b) (i) Show that the points Q, T, and R lie on a straight line (3 mks)
(ii) Determine the ratio in which T divides QR (1 mk)

19. The diagram below represents a rectangular swimming pool 25m long and 10m wide. The sides of the pool are vertical.

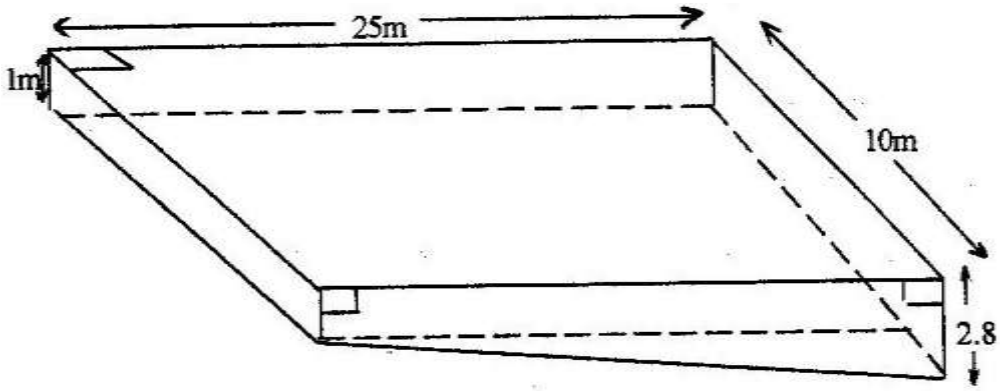

The floor of the pool slants uniformly such that the depth at the shallow end is 1m at the deep end is 2.8 m.

(a) Calculate the volume of water required to completely fill the pool.

(b) Water is allowed into the empty pool at a constant rate through an inlet pipe. It takes 9 hours for the water to just cover the entire floor of the pool.

Calculate:
(i) The volume of the water that just covers the floor of the pool (2 mks)
(ii) The time needed to completely fill the remaining of the pool (3 mks)

20. The table below gives some of the values of x for the function $y=\frac{1}{2}x^2 + 2x + 1$ in the interval $0 \leq x \leq 6$.

x	0	1	2	3	4	5	6
y	1	3.5	7	11.5	17	23.5	31

(a) Use the values in the table to draw the graph of the function (2 mks)

(b) (i) Using the graph and the mid – ordinate rule with six (6) strips,

(ii) estimate the area bounded by the curve, the x- axis, the y- axis and the line = 6. If the exact area of the region described in (b) (i) above is $78cm^2$, calculate the percentage error made when the mid – ordinate rule is used. Give the answer correct to two decimal places (2 mks)

21. The gradient of a curve at point (x,y) is 4x – 3. the curve has a minimum value of – 1/8

(a) Find

(i) The value of x at the minimum point (1 mk)

(ii) The equation of the curve (4 mks)

(b) P is a point on the curve in part (a) (ii) above. If the gradient of the curve at P is -7, find the coordinates of P (3 mks)

22. The data below shows the masses in grams of 50 potatoes

Mass (g)	25- 34	35-44	45 - 54	55- 64	65 - 74	75-84	85-94
No of potatoes	3	6	16	12	8	4	1

(a) On the grid provide, draw a cumulative frequency curve for the data (4mks)

(b) Use the graph in (a) above to determine

(i) The 60th percentile mass

(ii) The percentage of potatoes whose masses lie in the range 53 g to 68g (3mks)

23. A boat which travels at 5 km/h in still water is set to cross a river which flows from the north at 6km/h. The boat is set on a course of x^0 with the north.

(a) Given that $\cos x^0 = 3/5$, calculate

(i) The resultant speed of the boat (2 mks)

(ii) The angle which the track makes with the north (2 mks)

(b) If the boat is to sail on a bearing of 1350, calculate the bearing of possible course on which it can be set (4 mks)

24. (a) (i) Complete the table below for the function $y = x^3 + x^2 – 2x$ (2 mks)

x	-3	-2	-1	0	1	2	2.5
-2x	6	4	2	0	-2	-4	-5
x^2	9	4	1	0	1	4	6.25
x^3	-27	-8	-1	0	1	8	15.625
$Y = x^3 + x^2 – 2x$							

(ii) On the grid provided, draw the graph of $y = x^3 + x^2 – 2x$ for the values of x in the interval $– 3 \leq x \leq 2.5$ (2 mks)

(iii) State the range of negative values of x for which y is also negative (1 mk)

(b) Find the coordinates of two points on the curve other than (0,0) at which x-coordinate and y- coordinate are equal (3 mks)

MATHEMATICS

K.C.S.E PAPER 121/ 1 2006

QUESTIONS

SECTION 1 (50 MKS)

Answer all the questions in this section

1. Without using mathematical tables or a calculator evaluate (4 mks)

$$\frac{\sqrt[3]{675\times135}}{\sqrt{2025}}$$

2. All prime numbers less than ten are arranged in descending order to form a Number.

   (a) Write down the number formed (1 mk)

   (b) State the total value of the second digit in the number formed in (a) above (1 mk)

3. Simplify (4mks)

$$\frac{p^2+2pq+q^2}{p3^3-pq^2+p^2q-q^2}$$

4. In the figure below, ABCDE is a regular pentagon and ABF is an equilateral Triangle (1mk)

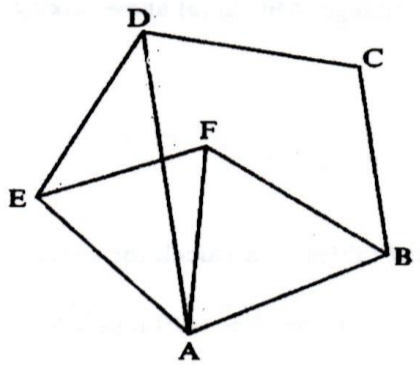

Find the size of

a) <ADE (1 mk)

b) <AEF (1 mk)

c) <DAF (1 mk)

5. Solve the inequality $3 - 2x < x \leq 2x + 5$ and show the solution on the number line (4mks)

6. The length of a rectangle is (3x + 1) cm, its width is 3 cm shorter than its length. Given that the area of the rectangle is 28cm2, find its length. (3 mks)

Prefer Calling Sir Obiero Amos @ 0706 851 439 for the Marking Schemes

7. In this question, mathematical table should not be used

A Kenyan bank buys and sells foreign currencies as shown below

	Buying (In Kenya shillings)	Selling In Kenya Shillings
1 Hong Kong dollar	9.74	9.77
1 South African rand	12.03	12.11

A tourists arrived in Kenya with 105 000 Hong Kong dollars and changed the whole amount to Kenyan shillings. While in Kenya, she pent Kshs 403 897 and changed the balance to South African rand before leaving for South Africa. Calculate the amount, in South African rand that she received. (3 mks)

8. In this question use a pair of compasses and a ruler only

(a) Construct triangle ABC such that AB = 6 cm, BC = 8cm and <ABC 1350 (2 mks)

(b) Construct the height of triangle ABC in (a) above taking BC as the base (1 mk)

9. A line with gradient of -3 passes through the points (3. k) and (k.8). Find the value of k and hence express the equation of the line in the form a ax + ab = c, where a, b, and c are constants.

10. Without using mathematical tables or a calculator evaluate

$6 \log_2 \sqrt[3]{64} + 10 \log_3 \sqrt[5]{243}$ (3 mks)

11. The diagram below represents a school gate with double shutters. The shutters are such opened through an angle of 630.

The edges of the gate, PQ and RS are each 1.8 m

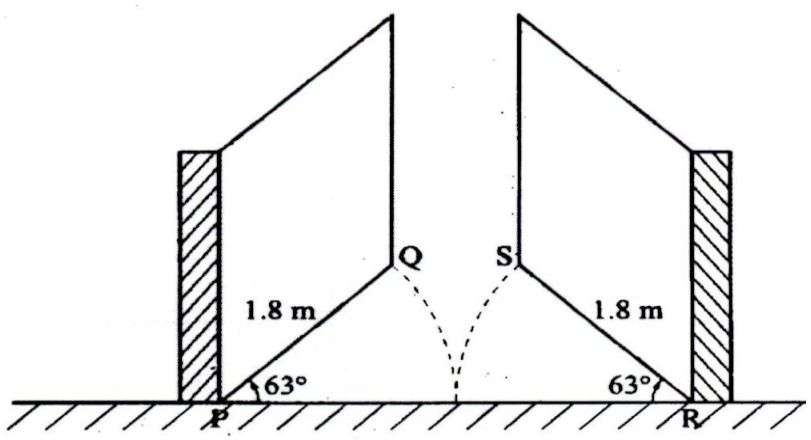

Calculate the shortest distance QS, correct to 4 significant figures (3 mks)

12. Two points P and Q have coordinates (-2 ,3) and (1,3) respectively. A translation map point
P to P‘ (10, 10)

(a) Find the coordinates of Q‘ the image of Q under the translation (1 mk)

(b) The position vector of P and Q in (a) above are p and q respectively
given that mp – nq = $\begin{pmatrix} -12 \\ 9 \end{pmatrix}$
Find the value of m and n (3 mks)

13. The diagram below represents a right pyramid on a square base of side 3cm. The slant of the pyramid is 4 cm.

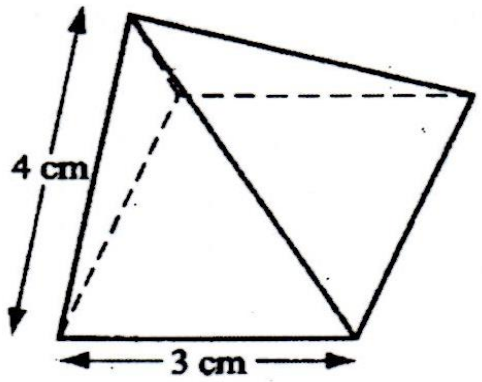

(a) Draw a net of the pyramid (2 mks)

(b) On the net drawn, measure the height of a triangular face from the top of the Pyramid (1 mk)

14. Hadija and Kagendo bought the same types of pens and exercise books from the same shop Hadija bought 2 pens and 3 exercise books for Kshs 78. Kagendo bought pens and 4 exercise books for Kshs 108

Calculate the cost of each item (3 mks)

15. The histogram below represents the distribution of marks obtained in a test. The bar marked A has a height of 3.2 units and a width of 5 units. The bar marked B has a height of 1.2 units and a width of 10 units

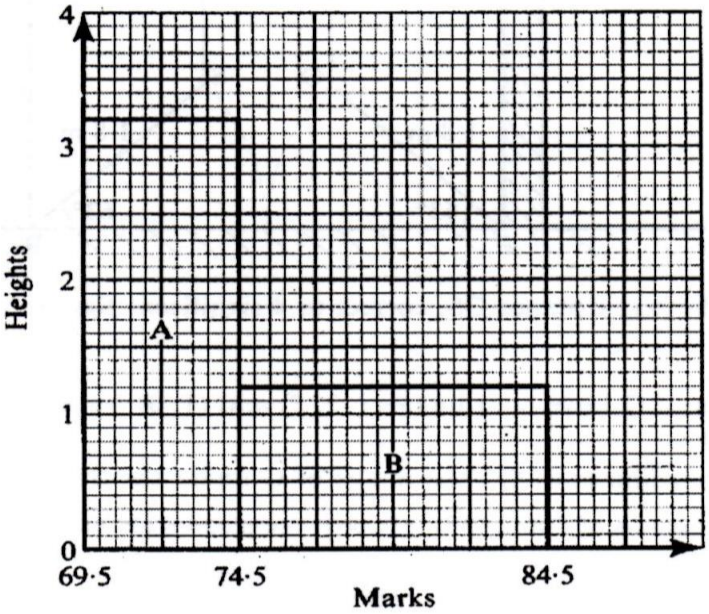

If the frequency of the class represented by bar B is 6, determine the frequency of the class represented by bar A.

16. A circle centre O, ha the equation $x^2 + y^2 = 4$
The area of the circle in the first quadrant is divided into 5 vertical strips of width 0.4 cm
(a) Use the equation of the circle to complete the table below for values of y correct to 2 decimal places (1 mk)

X	0	0.4	0.8	1.2	1.6	2.0
Y	2.00			1.60		0

(b) Use the trapezium rule to estimate the area of the circle (3 mks)

SECTION II (50 MKS)

Answer any five questions in this section)

17. In the year 2001, the price of a sofa set in a shop was Kshs 12,000

(a) Calculate the amount of money received from the sales of 240 sofa sets that year (2 mks)

(b) (i) In the year 2002 the price of each sofa set increased by 25% while the number of sets sold decreased by 10%
Calculate the percentage increase in the amount received from the sales (3 mks)

(ii) If at the end of year 2002, the price of each sofa set changed in the ration 16:15, calculate the price of each sofa set in the year 2003 (1 mk)

(c) The number of sofa sets sold in the year 2003 was P% less than the number sold in the year 200. Calculate the value of P, given that the amounts received from sales if the two years were equal. (4 mks)

18. On the Cartesian plane below, triangle PQR has vertices P(2, 3), Q (1,2) and R(4,1) while triangles P″ Q″R″ has vertices P″ (-2, 3), Q″ (-1,2) and R″ (-4, 1)

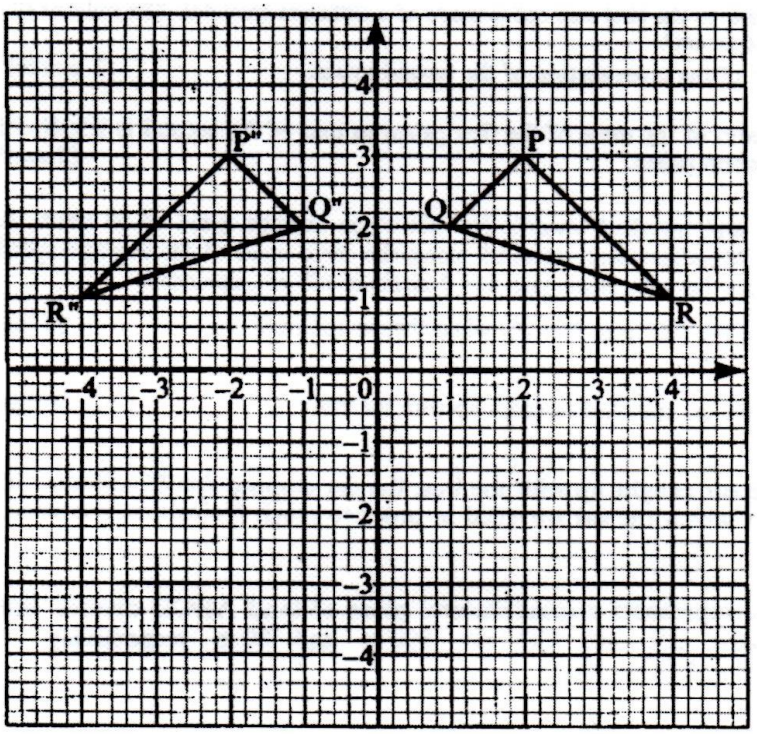

(a) Describe fully a single transformation which maps triangle PQR onto triangle P″Q″R″ (2 mks)

(b) On the same plane, draw triangle P‘Q‘R‘, the image of triangle PQR,

under reflection in line y = -x (2 mks)

(c) Describe fully a single transformation which maps triangle P‘Q‘R‘onto triangle P″Q″R″ (2 mks)

(d) Draw triangle P″Q″R″ such that it can be mapped onto triangle PQR by a positive quarter turn about (0,0) (2 mks)

(e) State all pairs of triangle that are oppositely congruent (2 mks)

19. The diagram below (not drawn to scale) represents the cross- section of a solid prism of height 8.0 cm (3 mks)

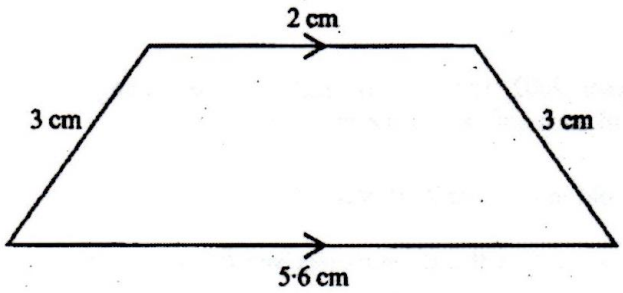

(a) Calculate the volume of the prism (3 mks)

(b) Given that the density of the prism is 5.75g/cm^3, calculate its mass in grams (2 mks)

(c) A second prism is similar to first one but is made of a different materials. The volume of the second is 246.24cm^3

(i) Calculate the area of the cross section of the second prism (3 mks)

(ii) Given that the ratio of the mass of the first to that of the second is 2: 5 and the density of the second prism (2 mks)

20. A bus left Mombasa and traveled towards Nairobi at an average speed of 60km/hr. After $2^1/_2$ hours; a car left Mombasa and traveled along the same road at an average speed of 100km/ hr. If the distance between Mombasa and Nairobi is 500km, Determine

(a) (i) The distance of the bus from Nairobi when the car took off (2 mks)

(ii) The distance the car traveled to catch up with the bus

(b) Immediately the car caught up with the bus, the car stopped for 25 minutes.

Find the new average speed at which the car traveled in order to reach Nairobi at the same time as the bus. (4 mks)

21. The figure below represents a quadrilateral piece of land ABCD divided into three triangular plots The lengths BE and CD are 100m and 80m respectively. Angle ABE = 300 <ACE = 450 and < ACD = 1000

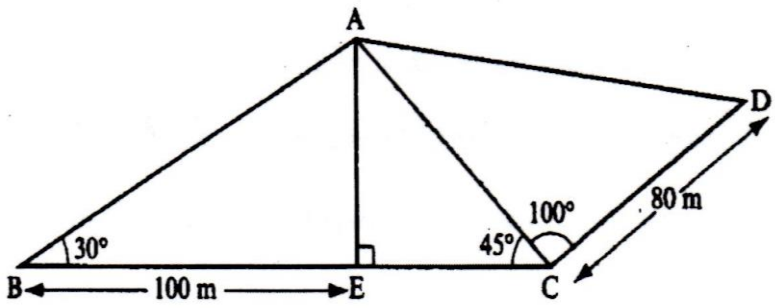

Find to four significant figures:

(i) The length of AE (2 mks)

(ii) The length of AD (3 mks)

(iii) the perimeter of the piece of land (3 mks)

(b) The plots are to be fenced with five strands of barbed wire leaving an entrance of 2.8 m wide to each plot. The type of barbed wire to be used is sold in rolls of lengths 480m. Calculate the number of rolls of barbed wire that must be bought to complete the fencing of the plots (2 mks)

22. In the diagram below, the coordinates of points A and B are (1,6) and (15,6) respectively) Point N is on OB such that 3 ON = 2OB. Line OA is produced to L such that OL = 3OA

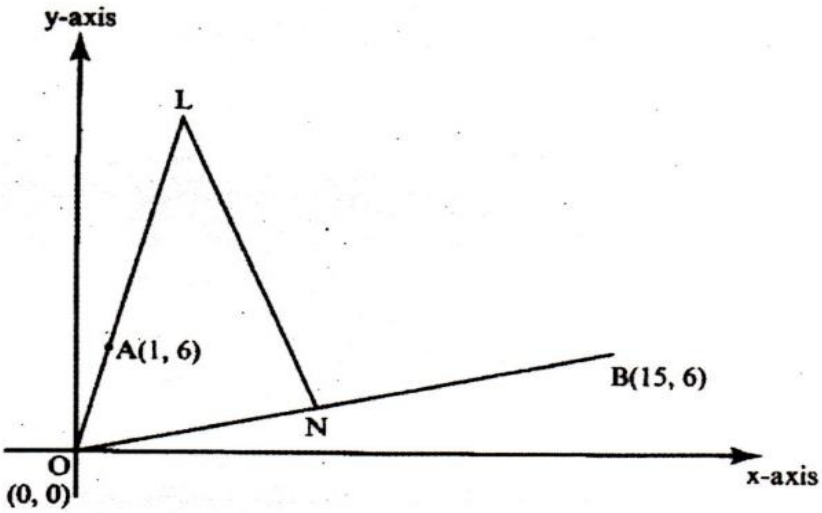

(a) Find vector LN (3 mks)

(b) Given that a point M is on LN such that LM: MN = 3: 4, find the coordinates of M

(c) If line OM is produced to T such that OM: MT = 6:1

(i) Find the position vector of T (1 mk)

(ii) Show that points L, T and B are collinear (4 mks)

23. The figure below is a model representing a storage container. The model whose total height is 15cm is made up of a conical top, a hemispherical bottom and the middle part is cylindrical. The radius of the base of the cone and that of the hemisphere are each 3cm. The height of the cylindrical part is 8cm.

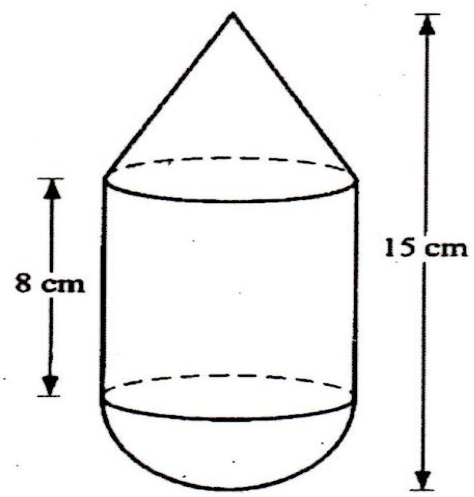

(a) Calculate the external surface area of the model (4 mks)

(b) The actual storage container has a total height of 6 metres. The outside of the actual storage container is to be painted. Calculate the amount of paint required if an area of $20m^2$ requires 0.75 litres of the paint (6 mks)

24. A particle moves along straight line such that its displacement S metres from a given point is $S = t^3 - 5t^2 + 4$ where t is time in seconds
nd

(a) the displacement of particle at t = 5 (2 mks)

(b) the velocity of the particle when t = 5 (3 mks)

(c) the values of t when the particle is momentarily at rest (3 mks)

(d) The acceleration of the particle when t = 2 (2 mks)

MATHEMATICS

K.C.S.E PAPER 121/ 1 2007

QUESTIONS

Answer all the questions in this section.

1. Evaluate without using mathematical tables or a calculator

$$\frac{0.0084 \times 1.23 \times 3.5,}{2.87 \times 0.056}$$

Expressing the answer as a fraction in its simplest form (2 mks)

2. The size of an interior angle of a regular polygon is 3x0 while its exterior angle is $(x- 20)^0$. Find the number of sides of the polygon (3 mks)

3. Expand the expression $(x^2 – y^2) (x^2 + y^2) (x^4 – y^4)$ (2 mks)

4. A Kenyan businessman bought goods from Japan worth 2, 950 000 Japanese yen. On arrival in
Kenya custom duty of 20% was charged on the value of the
goods. If the exchange rates were as follows

   1 US dollar = 118 Japanese Yen
   1 US dollar = 76 Kenya shillings

   Calculate the duty paid in Kenya shillings (3 mks)

5. The gradient of the tangent to the curve y = ax3 + bx at the point (1,1) is -5
Calculate the values of a and b (4 mks)

6. Simplify the expression $\frac{15a^2b – 10ab^2}{3a^2 – 5ab + 2b^2}$ (3 mks)

7. A square brass plate is 2 mm thick and has a mass of 1.05 kg. The density of the brass is 8.4 g/cm^3. Calculate the length of the plate in centimeters (3 mks)

8. Given that x is an acute angle and cos x = $\frac{2\sqrt{5}}{5}$, find without using mathematical tables or a calculator, $\tan (90 – x)^0$.

Prefer Calling Sir Obiero Amos @ 0706 851 439 for the Marking Schemes

9. A cylindrical solid of radius 5 cm and length 12 cm floats lengthwise in water to a depth of 2.5 cm as shown in the figure below.

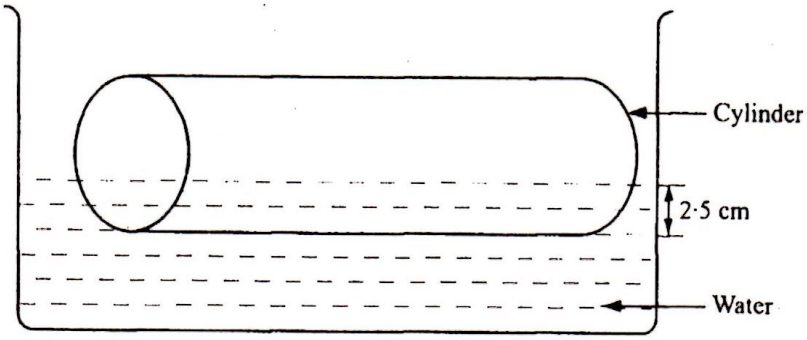

Calculate the area of the curved surface of the solid in contact with water, correct to 4 significant figures (4 mks)

10. In the figure below <A = 620, <B = 410, BC = 8.4 cm and CN is the bisector of < ACB.

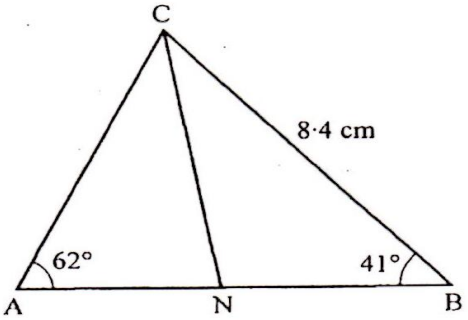

Calculate the length of CN to 1 decimal place. (3 mks)

11. In fourteen years time, a mother will be twice as old as her son. Four years ago, the sum of their ages was 30 years. Find how old the mother was, when the son was born. (4 mks)

12. (a) Draw a regular pentagon of side 4 cm (1 mk)
(b) On the diagram drawn, construct a circle which touches all the sides of the pentagon (2 mks)

13. The sum of two numbers x and y is 40. write down an expression, in terms of x, for the sum of the squares of the two numbers.
Hence determine the minimum value of $x^2 + y^2$ (4 mks)

14. In the figure below, PQR is an equilateral triangle of side 6 cm. Arcs QR, PR and PQ arcs of circles with centers at P, Q and R respectively.

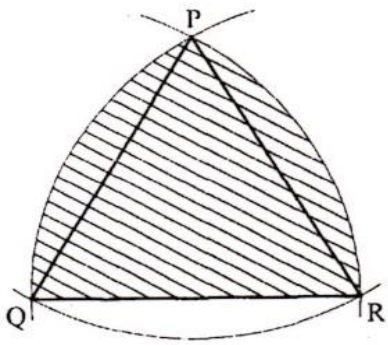

Calculate the area of the shaded region to 4 significant figures (4 mks)

15. Points L and M are equidistant from another point K. The bearing of L from K is 3300. The bearing of M from K is 2200.
Calculate the bearing of M from L (3mks)

16. A rally car traveled for 2 hours 40 minutes at an average speed of 120 km/h. The car consumes an average of 1 litre of fuel for every 4 kilometers. A litre of the fuel costs Kshs 59

Calculate the amount of money spent on fuel (3 mks)

SECTION II (50 mks)

Answer any five questions in this section

17. Three business partners: Asha Nangila and Cherop contributed Kshs 60,000, Kshs 85,000 and Kshs 105 000 respectively. They agreed to put 25% of the profit back into business each year. Thay also agreed to put aside 40% of the remaining profit to cater for taxes and insurance. The rest of the profit would then be shared among the partners in the ration of their contributions. At the end of the first year, the business realized a gross profit of Kshs 225 000

(a) Calculate the amount of money Cherop received more than Asha at the end of the first year (5 mks)

(b) Nangila further invested Kshs 25,000 into the business at the beginning of the second year. Given that the gross profit at the end of the second year increased in the ratio 10: 9, calculate Nangila‘s share of the profit at the end of the second year. (5 mks)

18. In the diagram below PA represents an electricity post of height 9.6 m. BB and RC represents two storey buildings of heights 15.4 m and 33.4 m respectively. The angle of depression of A from B is 5.50 While the angle of elevation of C from B is 30.50 and BC = 35m.

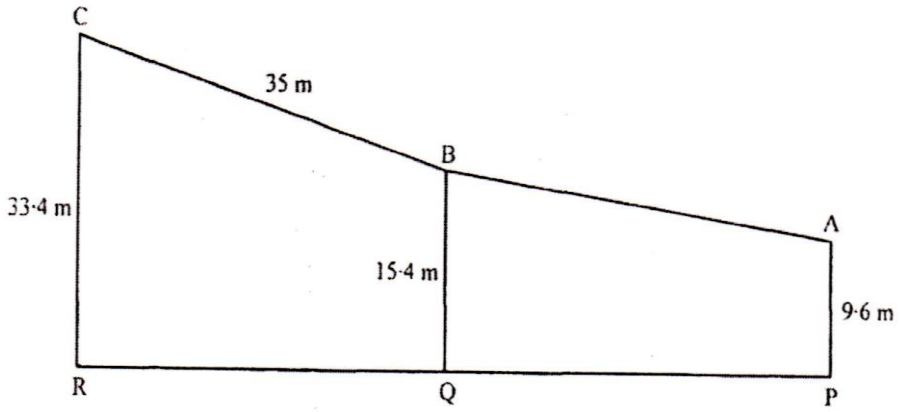

(a) Calculate, to the nearest metre, the distance AB (2 mks)

(b) By scale drawing find,

(i) The distance AC in metres (5 mks)

(ii) <BCA and hence determine the angle of depression of A from C (3 mks)

19. A frequency distribution of mks obtained by 120 candidates is to be represented in a histogram. The table below shows the grouped mks. Frequencies for all the groups and also the area and height of the rectangle for the group 30 – 60 mks.

Mks	0-10	10-30	30-60	60-70	70-100
Frequency	12	40	36	8	24
Area of rectangle			180		
Height of rectangle			6		

(a) (i) Complete the table (4 mks)

(ii) On the grid provided below, draw the histogram (2 mks)

(b) (i) State the group in which the median mark lies (1 mk)

(ii) A vertical line drawn through the median mk divides the total area of the histogram into two equal parts
Using this information or otherwise, estimate the median mark (3mks)

20. A retailer planned to buy some computers form a wholesaler for a total of Kshs 1,800,000. Before the retailer could buy the computers the price per unit was reduced by Kshs 4,000. This reduction in price enabled the retailer to buy five more computers using the same amount of money as originally planned.

(a) Determine the number of computers the retailer bought (6 mks)

(b) Two of the computers purchased got damaged while in store, the rest were sold and the retailer made a 15% profit
Calculate the profit made by the retailer on each computer sold (4 mks)

21. In the figure below, OQ = q and OR = r. Point X divides OQ in the ratio 1: 2 and Y divides OR in the ratio 3: 4 lines XR and YQ intersect at E.

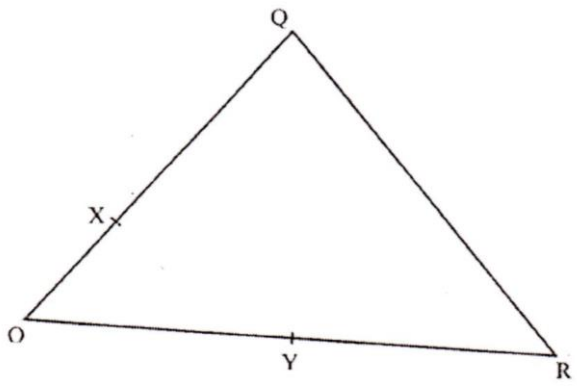

(a) Express in terms of q and r
(i) XR (1 mk)
(ii) YQ (1 mk)

(b) If XE = m XR and YE = n YQ, express OE in terms of: (1 mk)
(i) r, q and m
(ii) r, q and n (1 mk)

(c) Using the results in (b) above, find the values of m and n. (6 mks)

22. Two cylindrical containers are similar.The larger one has internal cross- section area of $45cm^2$ and can hold 0.945 litres of liquid when full. The smaller container has internal cross- section area of $20cm^2$

(a) Calculate the capacity of the smaller container

(b) The larger container is filled with juice to a height of 13 cm. Juice is then drawn from is and emptied into the smaller container until the depths of the juice in both containers are equal.

Calculate the depths of juice in each container. (2mks)

(c) On fifth of the juice in the larger container in part (b) above is further drawn and emptied into the smaller container. Find the difference in the depths of the juice in the two containers. (4 mks)

23. (a) Find the inverse of the matrix $\begin{bmatrix} 9 & 8 \\ 7 & 6 \end{bmatrix}$ (2 mks)

(b) In a certain week a businessman bought 36 bicycles and 32 radios for total of Kshs 227 280. In the following week, he bought 28 bicycles and 24 radios for a total of Kshs 174 960

Using matrix method, find the price of each bicycle and each radio that he Bought (4 mks)

(c) In the third week, the price of each bicycle was reduced by 10% while the price of each radio was raised by 10%. The businessman bought as many bicycles and as many radios as he had bought in the first two weeks.

Find by matrix method, the total cost of the bicycles and radios that the businessman bought in the third week. (4 mks)

24. The diagram on the grid below represents as extract of a survey map showing two adjacent plots belonging to Kazungu and Ndoe.

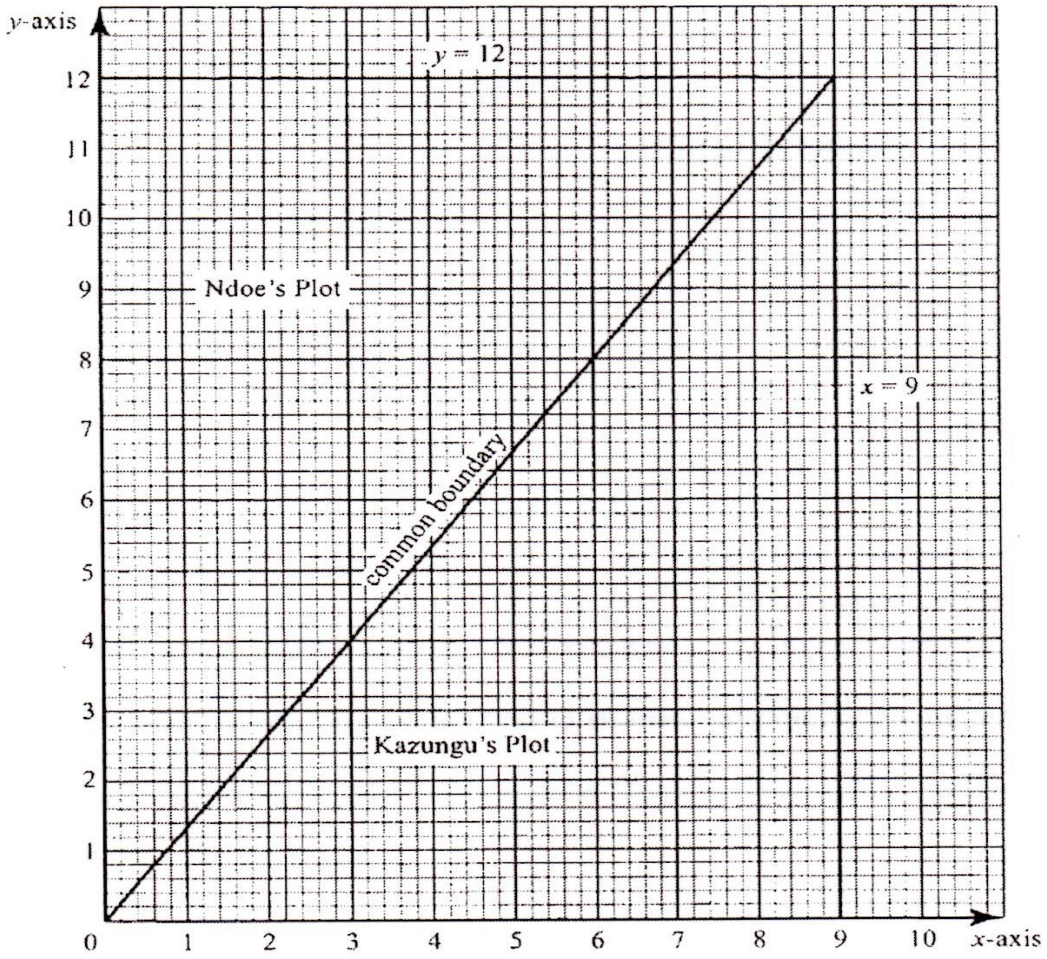

The two dispute the common boundary with each claiming boundary along different smooth curves coordinates (x, y) and (x, y2) in the table below, represents points on the boundaries as claimed by Kazungu Ndoe respectively.

x	0	1	2	3	4	5	6	7	8	9
y1	0	4	5.7	6.9	8	9	9.8	10.6	11.3	12
y2	0	0.2	0.6	1.3	2.4	3.7	5.3	7.3	9.5	12

(a) On the grid provided above draw and label the boundaries as claimed by Kazungu and Ndoe

(2 mks)

MATHEMATICS

K.C.S.E PAPER 121/ 1 2008

QUESTIONS

SECTION 1 (50 MAKS)

Answer all questions in this section.

1. Without using a calculator, evaluate

$$\frac{-8+(-5)\times(-8)-(-6)}{-3+(-8)\div 2\times 4}$$ (2mks)

2. Simplify $\dfrac{27^{\frac{2}{3}}\div 2^{4}}{32^{-\frac{3}{5}}}$ (3mks)

3. Simplify the expression $\dfrac{a^4-b^4}{a^3-ab^2}$ (3mks)

4. Mapesa traveled by train from Butere to Nairobi. The train left Butere on a Sunday at 2350 hours and traveled for 7 hours 15 minutes to reach Nakuru. After a 45 minutes stop in Nakuru, the train took 5 hours 40 minutes to reach Nairobi.
   Find the time, in the 12 hours clock system and the day Mapesa arrived in Nairobi. (2mks)

5. The figure below shows a net of a solid

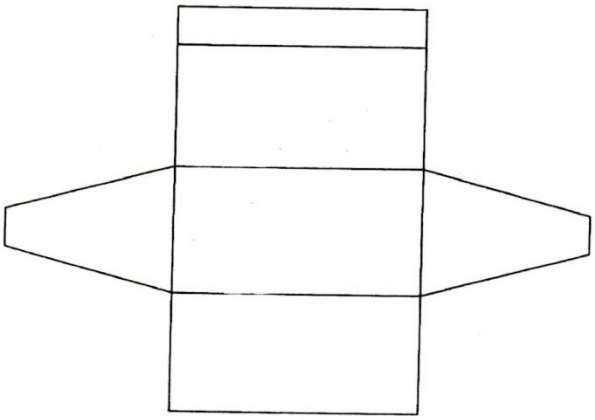

Below is a part of the sketch of the solid whose net is shown above.

Prefer Calling Sir Obiero Amos @ 0706 851 439 for the Marking Schemes

Complete the sketch of the solid, showing the hidden edges with broken lines. (3mks)

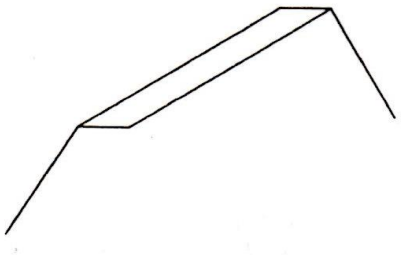

6. A fuel dealer makes a profit of Kshs. 520 for every 1000 litres of petrol sold and Ksh. 480 for every 1000 litres of diesel sold.
In a certain month the dealer sold twice as much diesel as petrol. If the total fuel sold that month was 900,000 litres, find the dealer's profit for the month. (3mks)

7. A liquid spray of mass 384g is packed in a cylindrical container of internal radius 3.2cm. Given that the density of the liquid is 0.6g/cm3, calculate to 2 decimal places the height of the liquid in the container. (3mks)

8. Line BC below is a side of a triangle ABC and also a side of a parallelogram BCDE.

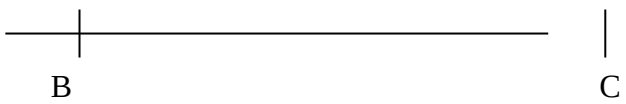

Using a ruler and a pair of compasses only construct:
(i) The triangle ABC given that □ABC = 1200 and AB= 6cm (1mk)

(ii) The parallelogram BCDE whose area is equal to that of the triangle ABC and point E is on line AB (3mks)

9. A solid metal sphere of radius 4.2 cm was melted and the molten material used to make a cube.
Find to 3 significant figures the length of the side of the cube. (3mks)

10. An angle 0f 1.8 radians at the centre of a circle subtends an area of length 23.4cm
Find;
a) The radius of the circle (2mks)
b) The area of the sector enclosed by the arc and the radii. (2mks)

11. Three vertices of a rhombus ABCD are; A (-4,-3), B(1,-1) and c are constants. (2mks)

a) Draw the rhombus on the grid provided below. (2mks)

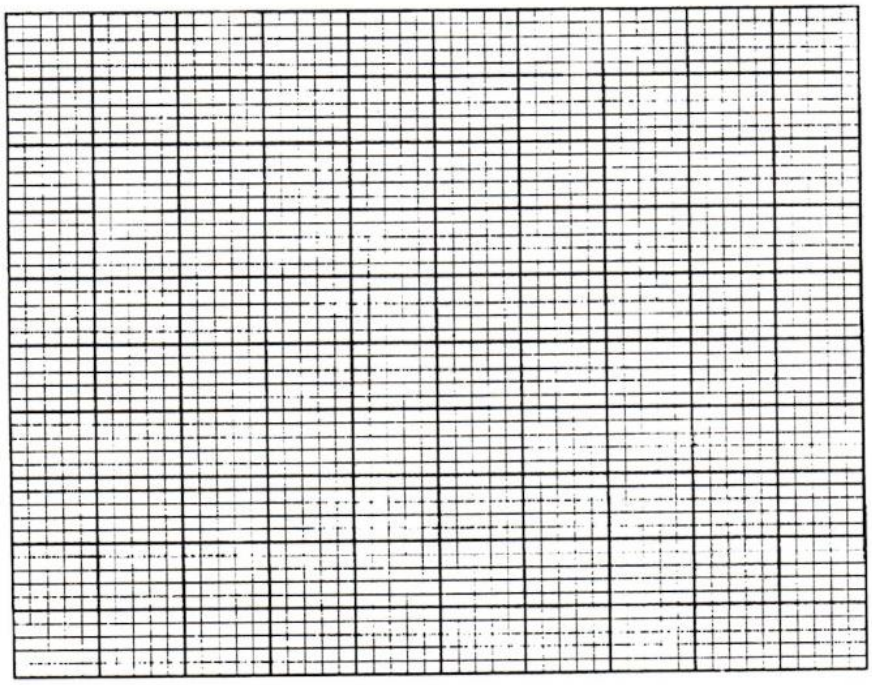

b) Find the equation of the line AD in the form y = mx + c, where and c are constants. (2mks)

12. Two matrices A and B are such that

Given that the determinant of AB = 4, find the value of k.

13. A rectangular and two circular cut-outs of metal sheet of negligible thickness are used to make a closed cylinder. The rectangular cut-out has a height of 18cm. Each circular cu-out has a radius of 5.2cm. Calculate in terms of , the surface area of the cylinder (3mks)

14. Given that log 4=0.6021 and log 6=0.7782, without using mathematical tables or a calculator, evaluate log 0.096. (3mks)

15. The equation of line L1 is 2y-5x-8=0 and line L2 passes through the points (-5, 0) and (5,-4).
Without drawing the lines L1 and L2 show that the two lines are perpendicular to each other. (3mks)

16 Solve the equation;
$2\cos 2\theta = 1$ for $\theta \leq 3600$ (4mks)

SECTION II (50 MKS)

Answer any five questions in this section.

17 a) The ratio of Juma's and Akinyi's earnings was 5:3 Juma's earnings rose to Ksh 8400 after an increase of 12%.
Calculate the percentage increase in Akinyi's earnings given that the sum of their new earnings was Ksh. 14100. (6mks)

b) Juma and Akinyi contributed all the new earnings to buy maize at Ksh 1175 per bag.
The maize was then sold at Ksh 1762.50 per bag. The two shared all the money from the sales of the maize in the ratio of their contributions.
Calculate the amount that Akinyi got. (4mks)

18. The figure below is a sketch of the curve whose equation is $y=x^2+x+5$.
It cuts the line $y=11$ at points P and Q.

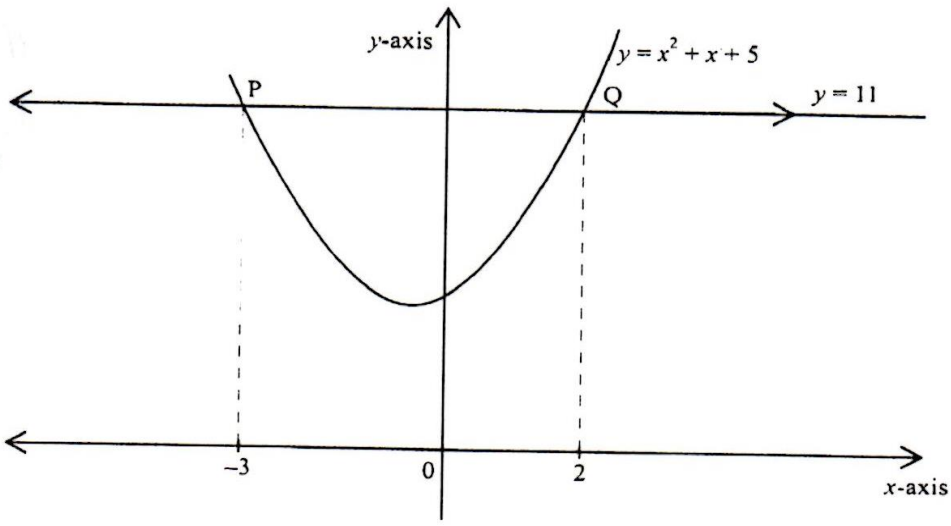

a) Find the area bounded by the curve $=x^2+x+5$ and the line $y=11$ using the trapezium rule with 5 strips. (5mks)

b) Calculate the difference in the area if the mid-ordinate rule with 5 ordinates was used instead of the trapezium rule. (5mks)

19 In the figure below AB=P, AD= q, DE= ½ AB and BC= 2/3 BD

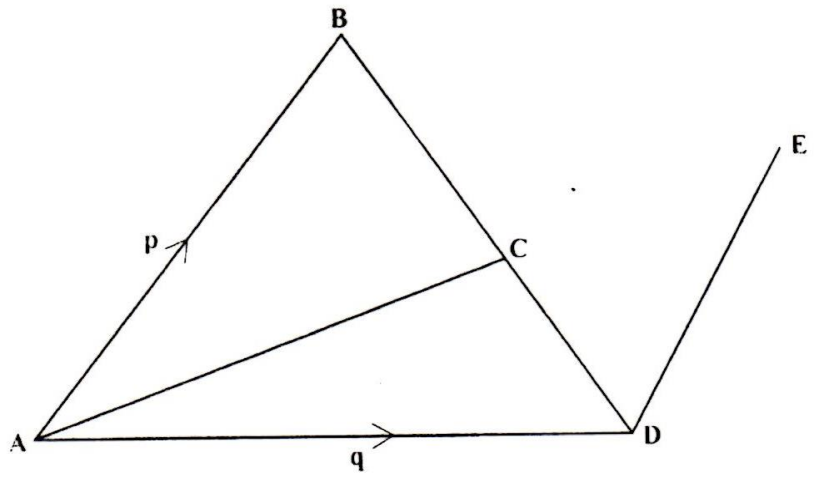

a) Find n terms of p arid q the vectors: (1mk)
(i) BD; (1mk)
(ii) BC; (1mk)
(iii)CD; (1mk)
(iv)AC. (2mks)

b) Given that AC=KCE, where k is a scalar, find
(i) The value of k (4mks)
(ii) The ratio in which C divides AE (1mk)

20. The diagram below represents two vertical watch-towers AB and CD on a level ground. P and Q are two points on a straight road BD. The height of the tower AB is 20m road a BD is 200m.

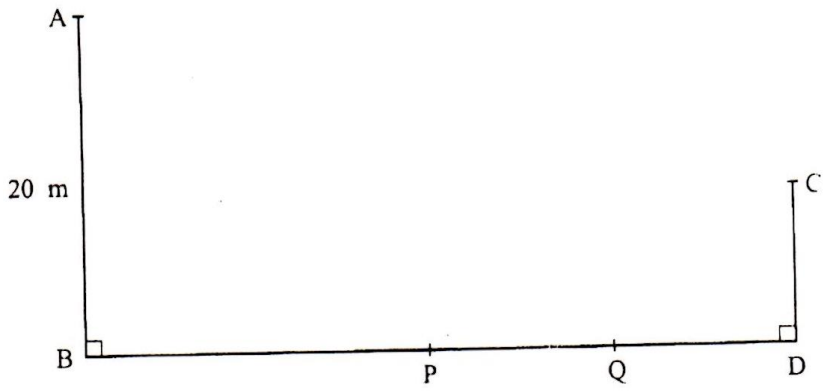

a) A car moves from B towards D. At point P, the angle of depression of the car from point A is 11.30. Calculate the distance BP to 4 significant figures. (2mks)

b) If the car takes 5 seconds to move from P to Q at an average speed of 36 km/h, calculate the angle of depression of Q from A to 2 decimal places

c) Given that QC=50.9m, calculate; (3mks)

(i) The height of CD in meters to 2 decimal places; (2mks)

(ii) The angle of elevation of A from C to the nearest degree. (3mks)

21. The diagram below shows a triangle ABC with A (3, 4), B (1, 3) and C (2, 1).

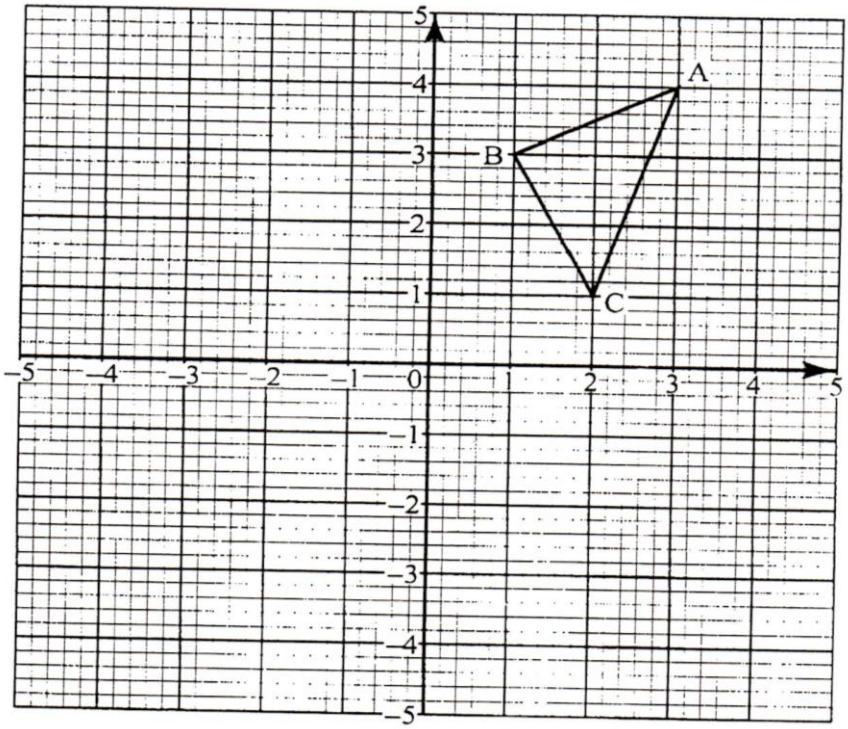

a) Draw ΔA B′C′ the image of ΔABC under a rotation of $+90^0$ about (0, 0). (2mks)

b) Drawn ΔA″B″ the image of AΔB″C″ under a reflection in the line y = x. (2mks)

c) Draw ΔAB″ C. the image under a rotation of -900 about (0, 0) (2mks)

d) Describe a single transformation that maps ΔABC″ onto ΔA‴B‴C‴ (2mks)

e) Write down the equations of the lines of symmetry of the quadrilateral BB″A‴A‴ (2mks)

Prefer Calling Sir Obiero Amos @ 0706 851 439 for the Marking Schemes

22. The diagram below represents a conical vessel which stands vertically. The which stands vertically, The vessels contains water to a depth of 30cm. The radius of the surface in the vessel is 21cm. (Take π=22/7).

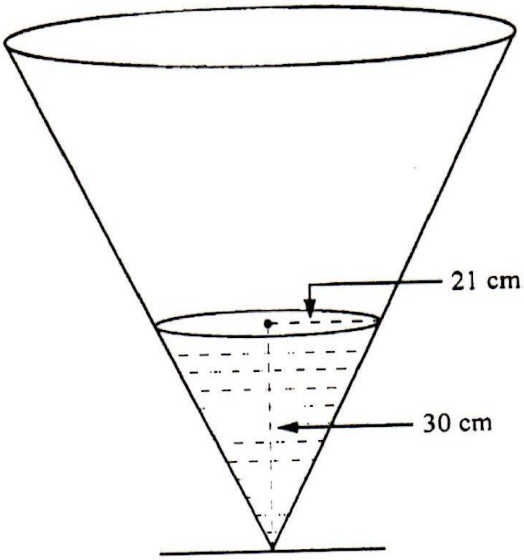

a) Calculate the volume of the water in the vessels in cm^3

b) When a metal sphere is completely submerged in the water, the level of the water in the vessels rises by 6cm.

Calculate:

(i) The radius of the new water surface in the vessel; (2mks)

(ii) The volume of the metal sphere in cm^3 (3mks)

(iii) The radius of the sphere. (3mks)

23. A group of people planned to contribute equally towards a water project which needed Ksh 200000 to complete, However, 40 members of the group without from the project. As a result, each of the remaining members were to contribute Ksh 2500.

a) Find the original number of members in the group. (5mks)

b) Forty five percent of the value of the project was funded by Constituency Development Fund (CDF). Calculate the amount of contribution that would be made by each of the remaining members of the group. (3mks)

c) Member‘s contributions were in terms of labour provided and money contributed. If the ratio of the value of labour to the money contributed was 6:19; calculate the total amount of money contributed by the members.

(2mks)

24. The distance s metres from a fixed point O, covered by a particle after t seconds is given by the equation;

S =t3 -6t2 + 9t + 5.

a) Calculate the gradient to the curve at t = 0.5 seconds (3mks)

b) Determine the values of s at the maximum and minimum turning points of the curve. (4mks)

c) On the space provided, sketch the curve of $s= t^3 - 6t^2 + 9t + 5$. (3mks)

MATHEMATICS

K.C.S.E PAPER 121/ 1 2009

QUESTIONS

Answer all the questions in this section in the spaces provided

1. Without using mathematical tables or calculator, evaluate (3 mks)

$$\frac{\sqrt{5184}}{6\times18\div9+(5-3)}$$

2. Without using a calculator, evaluate, $\frac{2\frac{1}{4}+\frac{3}{5}\div\frac{5}{6}of2\frac{2}{5}}{1\frac{2}{10}}$ leaving the answer as a fraction in its simplest form (3 mks)

3. Given that the ratio x: y = 2:3, find the ratio (5x-2y) : (x+y) (3 mks)

4. A bus traveling at an average speed of 63 km/h left a station at 8.15 a.m. find the average speed of the car. (3 mks)

5. Without using Logarithm tables or calculators, evaluate, $\frac{64^{-\frac{1}{2}}\times27000^{\frac{2}{3}}}{2^{-4}\times3^{0}\times5^{2}}$ (4 mks)

6. The figure below represents a plot of land ABCD such that AB = 85 m, BC =75 m , CD = 60 m DA = 50m and angle ABC = 900

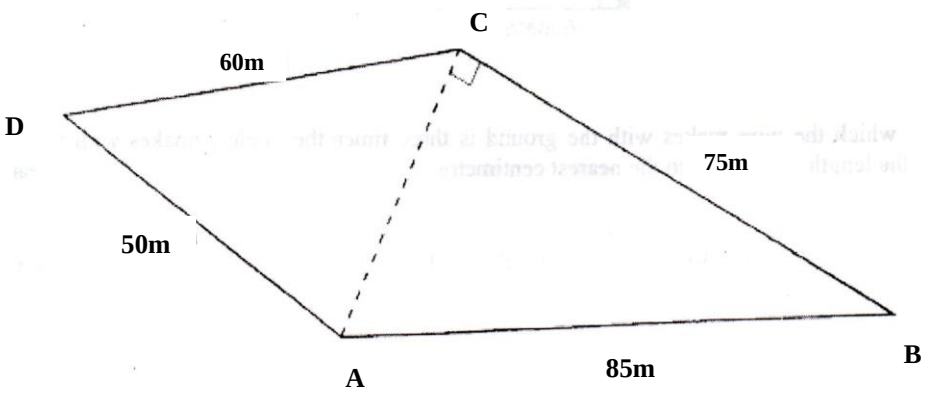

Determine the area of the plot in hectares correct to two decimal places. (4 mks)

7. A watch which loses a half-minute every hour was set to read the correct time at 05 45 h on Monday. Determine the time in the 12- hour system, the watch will show on the following Friday at 19 45 (3 mks)

Prefer Calling Sir Obiero Amos @ 0706 851 439 for the Marking Schemes

8. Simplify the expression $\frac{12x^2 + ax = 6a^2}{9x^2 - 4a^2}$ (3 mks)

9. A line which joins the points a (3, k) and B (-2, 5) is parallel to another line whose equation is

   $5y + 2x = 10$

   Find the value of k. (3 mks)

10. The size of an interior angle of a regular polygon is 6 ½ times that of its exterior angle determine the number of sides of the polygon. (3 mks)

11. Line AB shown below is a side of a trapezium ABCD in which angle ABC in which angle

    ABC= 1050, BC = 4 cm,
    CD = 5 cm and CD is parallel to AB.

Using a ruler and a pair of compasses only:

a) Complete the trapezium; (3 mks)

b) Locate point t on line AB such that angle ATD = 900 (1 mk)

12. An electric pole is supported t stand vertically on a level ground by a tight wire. The wire is pegged at a distance of 6 metres from the foot of the pole as shown.

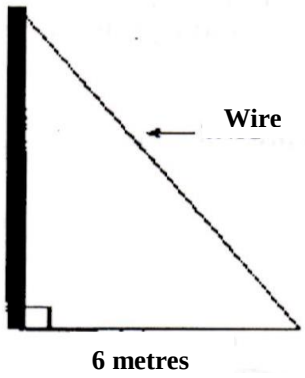

The angle which the wire makes with the ground is three times the angle it makes with the pole. Calculate the length of the wire to the nearest centimeter. (3 mks)

13. Give the equation: Sin $(3x + 30^0) = \frac{\sqrt{3}}{2}$, for $0^0 \leq x \leq 90^0$ (4 mks)

14. The diagonals of a rhombus PQRS intersect at T. Given that p(2,2), Q(3, 6) And R(-1, 5):

a) Draw the rhombus PQRS on the grid provided; (1 mk)

b) State the coordinates of T. (1 mk)

15. Abdi sold a radio costing Kshs 3 800 at a profit of 20%. He earned a commission of 22 ½ 5 on the profit. Find the amount he earned. (2 mks)

16. The following data was obtained for the masses of certain animals.

Mass (x kg)	**Frequency**
$1.5 \leq x < 5.5$	16
$5.5 \leq x < 7.5$	20
$7.5 \leq x < 13.5$	18
$13.5 \leq x < 155$	14

Complete the histogram on the grid provided (3 mks)

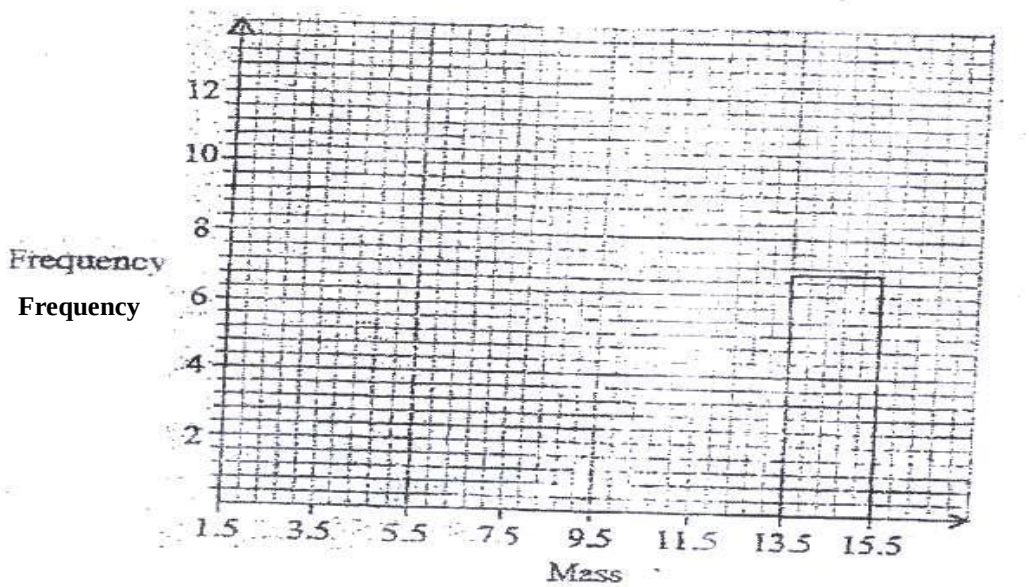

Prefer Calling Sir Obiero Amos @ 0706 851 439 for the Marking Schemes

SECTION II (50 MKS)

Answer only five questions in this section in the spaces provided.

17 In the figure below (not drawn to scale), AB = 8cm, AC= 6cm, AD= 7cm, CD= 2.82 cm and angle CAB =500

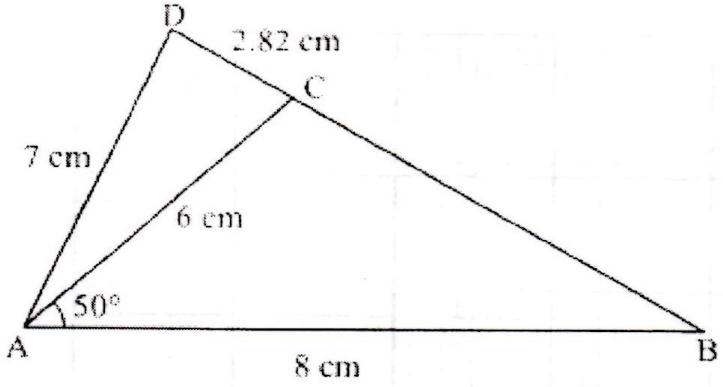

Calculate, to 2 decimal places

a) The length BC, (2 mks)

b) The size of angle ABC, (3 mks)

c) The size of angle CAD, (3 mks)

d) The area of triangle ACD (2 mks)

b) Express vector NM in terms of OB (1 mk)

c) Point P maps onto P by a translation $\begin{bmatrix} -5 \\ 8 \end{bmatrix}$ given that OP = OM + 2 MN, find the coordinates of P. (3 mks)

18. The marks scored by a group of pupils in a mathematics test were as recorded in the table below

Marks	Frequency
0 -9	1
10-19	2
20-29	4
30-39	7
40-49	10
50-59	16
60-69	20

a) i) State the modal class (1 mk)

ii) Determine the class in which the median mark lies (2 mks)

b) Using an assumed mean of 54.4, calculate the mean mark (7 mks)

19. A school planned to buy x calculators for a total cost of Kshs 16 200. The supplier agreed to offer a discount of Kshs 60 per calculator. The school was then able to get three extra calculators for the same amount of money.

a) Write an expression in terms of x, for the:

i) Original price of each calculator. (1 mk)

ii) Price of each calculator after the discount (1 mk)

b) Form an equation in x and hence determine the number of calculators the School bought. (5 mks)

c) Calculate the discount offered to the school as a percentage (3 mks)

20. The position vectors of points A and B with respect to the origin O, are $\begin{bmatrix} -5 \\ 8 \end{bmatrix}$ and $\begin{bmatrix} 12 \\ -5 \end{bmatrix}$ respectively

a) Find:

i) The coordinates of N and M; (3 mks)

ii) The magnitude of Nm (3 mks)

21. A glass, in the form of a frustum of a cone, is represented by the diagram below. The glass contains water to a height of 9 cm,. The bottom of the glass is a circle of radius 2 cm while the surface of the water is a circle of radius 6 cm.

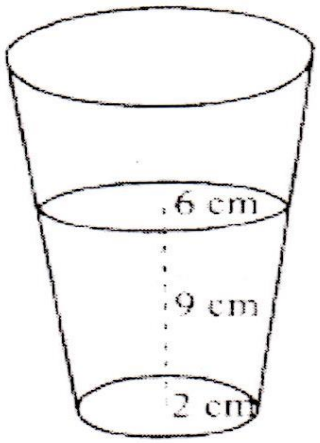

a) Calculate the volume of the water in the glass (3 mks)

b) When a spherical marble is submerged into the water in the glass, the water level rises by 1 cm.
Calculate:

i) The volume of the marble; (4 mks)

ii) The radius of the marble (3 mks)

22. The diagram below shows the speed-time graph for a train traveling between two stations. The train starts from rest and accelerates uniformly for 150 seconds. It then travels at a constant speed for 300 seconds and finally decelerates uniformly for 200 seconds.

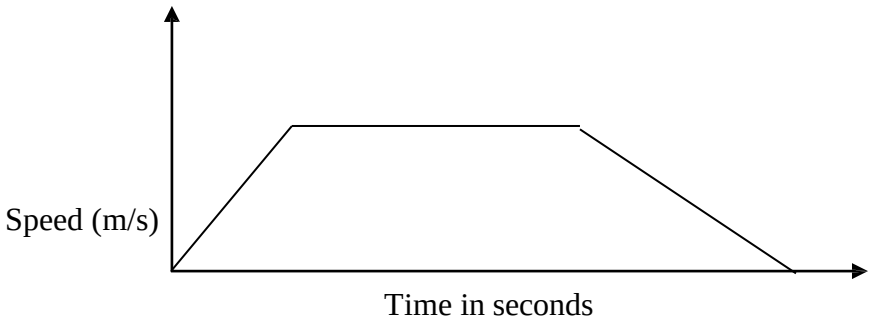

Given that the distance between the two stations is 10 450 m, calculate the:

a) Maximum speed, in Km/h, the train attained; (3 mks)
Acceleration,

b) Distance the train traveled during the last 100 seconds; (2 mks)

c) Time the train takes to travel the first half of the journey. (3 mks)

23. Three points P, Q and R are on a level ground. Q is 240 m from P on a bearing of 2300 . R is 120 m to the east of P

a) Using a scale of 1 cm to represent 40 m, draw a diagram to show the positions of P, Q and R in the space provided below. (2 mks)

b) Determine
i) The distance of R from Q (2 mks)

ii) The bearing of R from Q (2 mks)

c) A vertical post stands at P and another one at Q. A bird takes 18 seconds to fly directly from the top of the post at q to the top of the post at P.
Given that the angle of depression of the top of the post at P from the top of the post at Q is 90,

Calculate:

i) The distance to the nearest metre, the bird covers; (2 mks)

ii)The speed of the bird in Km/h (2 mks)

24. a) On the grid provided, draw a graph of the function

$Y = \frac{1}{2}x^2 - x + 3$ for $0 \leq x \leq 6$ (3 mks)

b) Calculate the mid-ordinates for 5 strips between x= 1 and x=6, and hence

Use the mid-ordinate rule to approximate the area under the curve between x= 1, x=6 and the x-axis. (3 mks)

c) Assuming that the area determined by integration to e the actual area, calculate the percentage error in using the mid-ordinate rule. (4 mks)

MATHEMATICS

K.C.S.E PAPER 121/ 1 2010

QUESTIONS

SECTION 1(50 MKS)

Answer all the questions in the spaces provided.

1. Without using a calculator evaluate,

   $\frac{-2(5+3) - 9\div3+5}{-3X-5+-2 X4}$ (3 mks)

2. Kutu withdrew some money from a bank. He spent $^{3}/_{8}$ of the money to pay for Mutua's school fees and $^{2}/_{5}$ to pay for Tatu's fees. If he remained with Ksh 12,330. calculate the amount of money he paid for Tatu's school fees. (4 mks)

3. A straight line / passes through the point(3,-2) and is perpendicular to a line whose equation is $2y - 4x = 1$.
   Find the equation of / in the form y= mx + c, where m and c are constants**.**

   (3 mks)

4. A bus left a petrol station at 9.20 a.m and y traveled at an average speed of 75 km/h to a town N. At 9.40 a.m a taxi traveling at an average speed of 95 mk/h, left the same petrol station and followed the route of the bus.

   Determine the distance, from the petrol station, covered by the taxi at he time it caught up with the bus. (3 mks)

5. The sum of three consecutive odd integers is greater than 219.Determine the first three such integers. (3 mks)

6. A Kenyan company received US Dollars 100,000.The money was converted into Kenya shillings in a bank which buys and sells foreign currencies as follows:

	Buying (in Kenya shillings)	Selling (in Kenya shillings)
1 US Dollar	77.24	77.44
1 Sterling Pound	121.93	122.27

   (a) Calculate the amount of money, in Kenya shillings, the company received. (2 mks)

   (b) The company exchanged the Kenya shillings calculated in (a) above, into sterling pounds to buy a car from Britain. Calculate the cost of the car to the nearest sterling pound. (2 mks)

Prefer Calling Sir Obiero Amos @ 0706 851 439 for the Marking Schemes

7. In the figure below, OPQR is a trapezium in which PQ is parallel to OR and M is the mid-point of QR.OP=p, OR=r and PQ = $\frac{1}{}$OR.

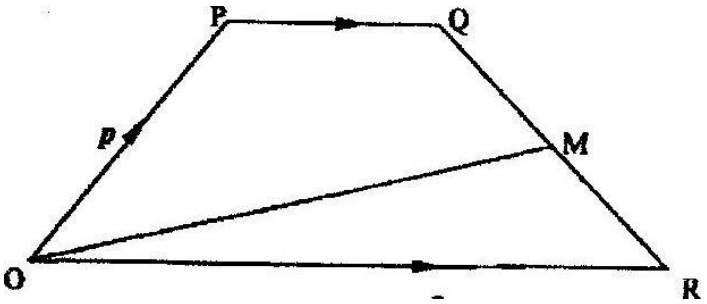

Find OM in terms of p and r. (3 mks)

8. Without using mathematical tables or a calculator, evaluate $27^{2/3} \times \frac{81^{-1/4}}{16}$ (3mks)

9. The figure below is a net of a cube with some dots on two faces.

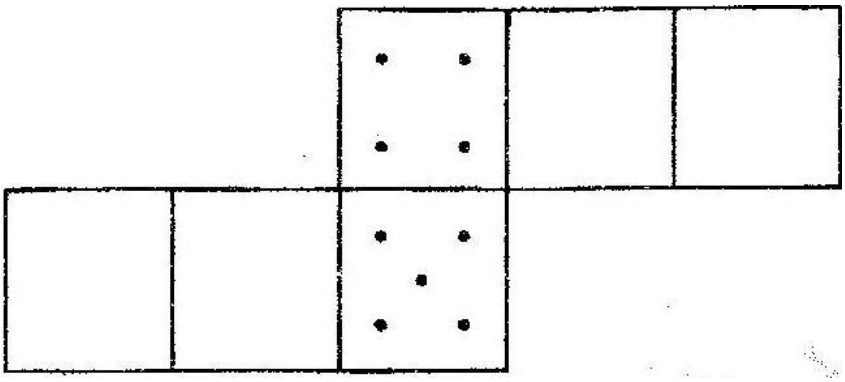

Given that the number of dots on pairs of opposite faces add up to 7, fill in appropriate dots in each of the empty faces. (2 mks)

10. Using a ruler and a pair of compasses only, construct a rhombus QRST in which an angle TQR $=60^0$ and QS = 10cm. (3 mks)

11. A fruit vendor bought 1948 oranges on a Thursday and sold 750 of them on the same day. On Friday, he sold 240 more oranges than on Thursday. On Saturday he bought 560 more oranges. Later that day, he sold all the oranges he had at a price of Ksh 8 each.

Calculate the amount of money the vendor obtained from the sales of Saturday. (4 mks)

12. Simplify the expression $\frac{x^2 + x - 4xy - 4x}{(x + 1)(4xy^2 - xy)}$ (3mks)

13. Given that 3θ is an acute angle and $\sin 3\theta^0$,find the value of θ. (3 mks)

14. A cylindrical solid whose radius and height are equal has a surface area of 154 cm^2. Calculate its diameter, correct to 2 decimal places.(Take Л =3.142). (3mks)

15. The figure below shows two sectors in which CD and EF are arcs of concentric circles ,centre O. Angle COD =2 radians and CE=DF= 5cm.

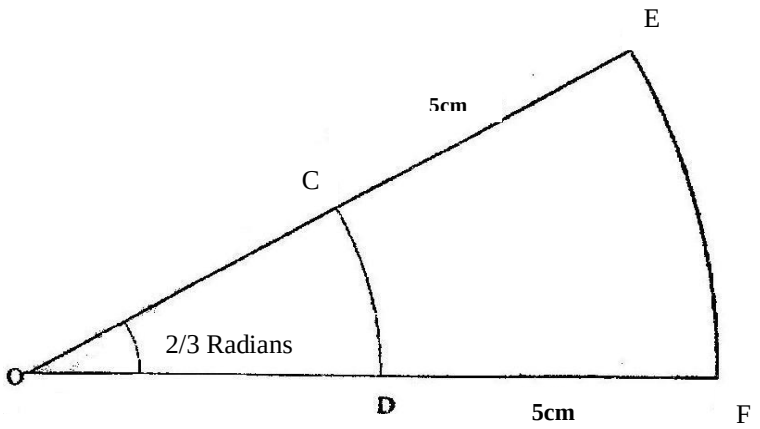

If the perimeter of the shape CDFE is 24 cm, calculate the length of OC.

16. The histogram below represents the distribution of heights a of seedlings of a certain plant.

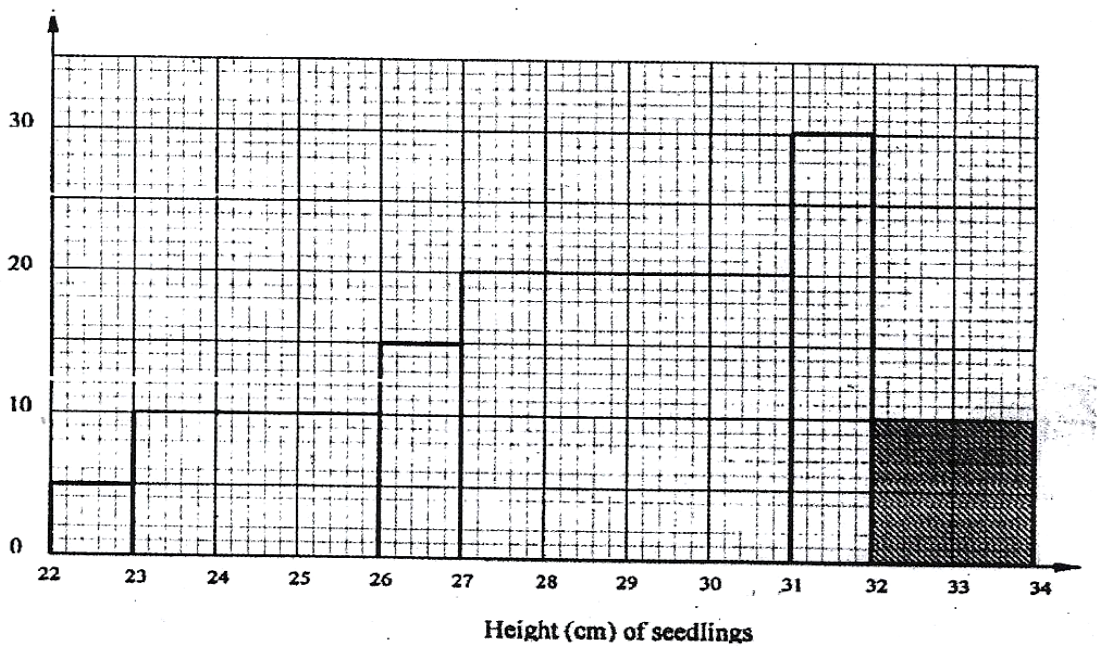

The shaded area in the histogram represents 20 seedlings. Calculate the percentage number of seedlings with heights of at least 23 cm but less than 27 cm. (3 mks)

SECTION 2 (50 MKS)

Answer only five questions in this section in the spaces provided.

17. A saleswoman is paid a commission of 20% on goods sold worth over Ksh 100,000. She is also paid a monthly salary of Ksh 12,000.In a certain month, she sold 360 handbags at Ksh 500 each.

(i) Calculate the saleswoman's earnings that month. (3 mks)

(ii) The following month, the saleswoman's monthly salary was increased by 10%. Her to total earnings that month were Ksh 17,600.

Calculate:

(i) The total amount of money received from the sales of handbags that month. (5mks)

(ii) The number of handbags sold that month. (2 mks)

18. A carpenter constructed a closed wooden box with internal measurements.1.5 metres long,0.8 metres wide and 0.4 metres high. The wood used in constructing the box was 1-0 cm thick and had a density of 0.6 g/cm^3.

a). Determine the:

(i)Volume in cm^3,of the wood used in constructing the box (4 mks)

(ii)Mass of the box in kilograms, correct to 1 decimal place. (2 mks)

b).Identical cylindrical tins of diameter 10 cm, height 20 cm with a mass of 120g each were packed in the box.

Calculate the:

(i) Maximum number of tins that were packed. (2mks)

(ii) Total mass of the box with the tins. (2mks)

19.a). Find A $^{-1}$,the inverse of matrix A = $\begin{pmatrix} 5 & 6 \\ 7 & 9 \end{pmatrix}$ (2 mks)

b).Okello bought 5 physics books and 6 mathematics books for a total of Ksh 2,440. Ali bought 7 physics books and 9 mathematics books for a total of ksh 3,560.

(i) Form a matrix equation to represent the above information. (1 mk)

(ii) Use matrix method to find the price of a physics book and that of a mathematics book. (3mks)

A school bought 36 physics books and 50 mathematics books. A discount of 5% was allowed on each physics book whereas a discount of 8% was allowed on each mathematic book.

C). Calculate the percentage discount in the cost of all the books bought. (4mks)

20. The boundaries PQ,QR,RS and SP of a ranch are straight lines such that:
Q is 16 km ona bearing of 040^0 from P;R is directly south of Q and east of P and S is
12 km on a beqaring of 120^0 from R.

(a) Using a scale of 1 cm to represent 2 km.show the above information in a scale drawing. (3mks)

(b) From the scale drawing determine:
(i) The distance in kilometers of P from S.
(ii) The bearing of P from S.

21. Motorbike A travels at b01 km/h faster than motorbike B whose speed is x km/h. Motorbike A takes $1^{1/}{}_2$ hours lesss than the motorbike B to cover a 180 km journey.

(a) Write an expression in terms of x for the time taken to cover the 180 km journey by:
(i) Motorbike A; (1 mk)
(ii) Motorbike B; (1 mk)

(b) Use the expressions (a)above to determine the speed ,in km/h,of motorbike A. (6mks)

(c) For a journey of 48 km, motorbike B starts 10 minutes ahead of motorbike A. Calculate in minutes, the difference in the time of their arrival at the destination. (2mks)

22. In the figure below, ABCD is a square .Points P, Q, R and S are the midpoints of AB,BC,CD and DA respectively.

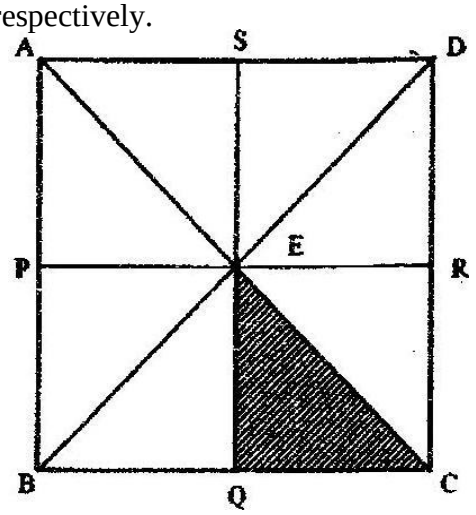

(a).Describe fully:

(i) a reflection that maps triangle QCE onto triangle SDE. (1mk)

(ii) an enlargement that maps triangle QCE onto triangle SAE. (2 mks)

(iii) a rotation that maps triangle QCE onto triangle SED. (3 mks)

(b).The triangle ERC is reflected on the line BD. The image of ERC under the reflection is rotated clockwise through an angle of 90^0 about P.

Determine the images of R and C:

(i) Under the reflection (2mks)

(ii) After two successive transformations (2mks)

23. The frequency distribution table below represents the number of kilograms of meat sold in a butchery.

Mass in Kg	1 - 5	6 - 10	11 - 15	16 - 20	21 - 25	26 - 30	31 – 35
Frequency	2	3	6	8	3	2	1

(a) State the modal frequency (1mk)

(b) Calculate the mean mass. (5 mks)

24. A rectangular box open at the top has a square base. The internal side of the base is x cm long and the total internal surface area of the box is 432 cm^2.

(a) Express in terms x:

(i) The internal height h, of the box. (3mks)

(ii) The internal volume V, of the box. (1 mk)

(b) Find:

(i) The value of x for which the volume V is maximum; (4 mks)

(ii) The maximum internal volume of the box. (2mks)

Prefer Calling Sir Obiero Amos @ 0706 851 439 for the Marking Schemes

MATHEMATICS

K.C.S.E PAPER 121/ 1 2011

QUESTIONS

SECTION 1 (50 mks)

Answer all the questions in this section

1. Without using a calculator, evaluate; (3 mks)

2. The diagonal of a rectangular garden measures 111/4 m while its width measures 63/4 m.Calculate the perimeter of the garden. (2 mks)

3. A motorist took 2 hours to travel from one town to another town and 1 hour 40 minutes to travel back. Calculate the percentage change in the speed of the motorist. (3 mks)

4. A square room is covered by a number of whole rectangular slabs of sides 60cm by 42 cm. Calculate the least possible area of the room in square rnetres. (3 mks)

5. Given that sin $(x + 60)°$ = cos $(2x)°$, find tan $(x + 60)°$.

6. Simplify the expression: (3 mks)

7. The external length, width and height of an open rectangular container are 41 cm, 21 cm and 15.5 cm respectively. The thickness of the material making the container is 5 mm. If the container has 8 litres of water, calculate the internal height above the water level. (4 mks)

8. Factorise $2 \times 2y^2 - 5xy - 12$ (2 mks)

9. Using a ruler and a pair of compases only:
   (a) construct a parallelogram PQRS in which PQ = 6 cm, QR = 4 cm and angle SPQ= 75°; (3 mks)

   (b) determine the perpendicular distance between PQ and SR. (1 mk)

Prefer Calling Sir Obiero Amos @ 0706 851 439 for the Marking Schemes

10. The masses of people during a clinic session were recorded as shown in the table below.

Mass (kg)	40-44	45-49	50-54	55-59	60-64	65-69	70-74
No. of people	1	2	12	10	2	2	1

Calculate the mean mass. (3 mks)

11. A customer paid Ksh. 5 880 for a suit after she was allowed a discount of 2% on the selling price. If the discount had not been allowed, the shopkeeper would have made a profit of 20% on the sale of the suit. Calculate the price at which the shopkeeper bought the suit. (3 mks)

12. Three vertices of a parallelogram PQRS are P(-l, 2), Q(8, -5) and R (5,0).

(a) On the grid provided below draw the parallegram PQRS. (1 mk)

(b) Determine the length of the diagonal QS. (2 mks)

13. In January, Mambo donated 1/6th of his salary to a children's home while Simba donated 1/5th of his salary to the same children's home. Their total donation for January was Ksh. 14 820. In February, Mambo donated 1/8th of his salary to the children's home while Simba donated 1/12th of his salary to the children's home. Their total donation for February was Ksh 8 675. Calculate Mambo 's monthly salary. (4 mks)

14. (a) Express 10500 in terms of its prime factors. (1 mk)

(b) Determine the smallest positive number P such that 10500P is a perfect cube. (2 mks)

15. Three police posts X, Y and Z are such that Y is 50 km on a bearing of 060° from X while Z is 70 km from Y and on a bearing of 300° from X.

(a) Using a suitable scale, draw a diagram to represent the above situation. (3 mks)

(b) Determine the distance, in km, of Z from X. (1 mk)

16. A small cone of height 8 cm is cut off from a bigger cone to leave a frustum of height 16 cm, if the volume of the smaller cone is 160 cm^3, find the volume of the frustum (3 mks)

SECTION II (50 mks)

Answer any five questions in this section

17. A solid consists of a cone and a hemisphere. The common diameter of the cone and the hemisphere is 12 cm and the slanting height of the cone is 10 cm.

(a) Calculate correct to two decimal places:

(i) the surface area of the solid; (3 mks)

(ii) the volume of the solid (4 mks)

(b) If the density of the material used to make the solid is 1.3 g/cm3, calculate its mass in kilograms. (3 mks)

18. Makau made a journey of 700 km partly by train and partly by bus. He started his journey at 8.00 a.m. by train which travelled at 50 km/h. After alighting from the train, he took a lunch break of 30 minutes. He then continued his journey by bus which travelled at 75 km/h. The whole journey took 111/2 hours.

(a) Determine:

(i) the distance travelled by bus; (4 mks)

(ii) the time Makau started travelling by bus. (3 mks)

(b) The bus developed a puncture after travelling 1871/2 *km*. It took 15 minutes to replace the wheel.

Find the time taken to complete the remaining part of the journey (3 mks)

19. (a) The product of the matrices $\begin{matrix} 0 & 1 \\ 2 & p \end{matrix}$ and $\begin{bmatrix} -15 & q-5 \\ p & p-2 \end{bmatrix}$ is a singular matrix.

Find the value of p. (3 mks)

(b) A saleswoman earned a fixed salary of Ksh *x* and a commission of Ksh *y* for each item sold. In a certain month she sold 30 items and earned a total of Ksh 50 000. The following month she sold 40 items and earned a total of Ksh 56 000.

(i) Form two equations in *x and y.*

(ii) Solve the equations in (i) above using matrix method. (3 mks)

(iii) In the third month she earned Ksh 68 000. Find the number of items sold. (2 mks)

20. In a triangle ABC, BC =8 cm, AC= 12 cm and angle ABC = 120°.

(a) Calculate the length of AB, correct to one decimal place. (4 mks)

(b) If BC is the base of the triangle, calculate, correct to one decimal place:

(i) the perpendicular height of the triangle; (2 mks)

(ii) the area of the triangle; (2 mks)

(iii) the size of angle ACB. (2 mks)

21. (a) Using the trapezium rule with seven ordinates, estimate the area of the region bounded by the curve $y = -x^2 + 6x + 1$, *the* lines $x = 0$, $y = 0$ and $x = 6$. (5 mks)

(b) Calculate:

(i) the area of the region in (a) above by integration; (3 mks)

(iii) the percentage error of the estimated area to the actual area of the region,correct to two decimal places. (2 mks)

22. The displacement, *s* metres, of a moving particle after,t seconds is given by, $s = 2t^3 - 5t^2 + 4t + 2$. .

Determine:

(a) the velocity of the particle when $t = 3$ seconds; (3 mks)

(b) the value o f t when the particle is momentarily at rest; (3 mks)
(3 mks)

(c) the displacement when the particle is momentarily at rest; (2 mks)

(d) the acceleration of the particle when $t = 3$ seconds. (2 mks)

23. In the figure below, ABCD is a trapezium, AB is parallel to DC, diagonals AC and DB intersect at X and DC = 2 AB. **AB = a, DA = d, AX =** k **AC** and **DX =** h**DB,** where h and k are constants.

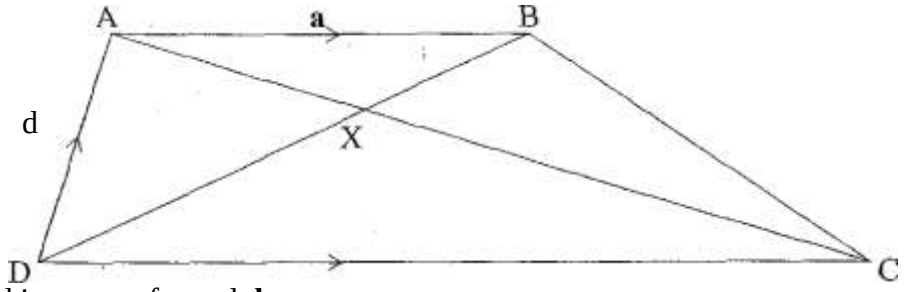

(a) Find in terms of **a** and **d:**

(i) **BC;** (2 mks)

(ii) **AX;** (2 mks)

(iii)**DX;** (1 mks)

(b) Determine the values of *h* and *k* (5 mks)

24. The frequency table below shows the daily wages paid to casual workers by a certain company.

Wages in shillings	100-150	1.50-200	200-300	300-400	400-600
No: of workers	- 160	120	380	240	100

(a) Draw a histogram to represent the above information. (5 mks)

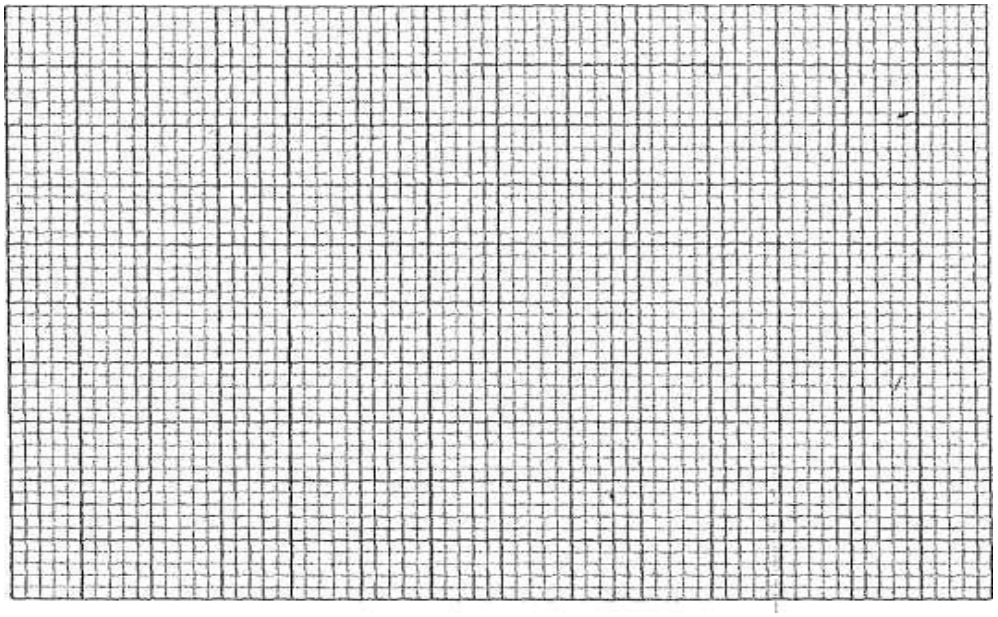

(b) (i) State the class in which the median wage lies. (1 mk)

(ii) Draw a vertical line, in the histogram, showing where the median wage lies. (1 mk)

(c) Using the histogram, determine the number of workers who earn sh 450 or less per day. (3 mks)

MATHEMATICS

K.C.S.E PAPER 121/ 1 2012

QUESTIONS

SECTION 1 (50 mks)

Answer** all **the questions in this section

1. Without using a calculator, evaluate (4 mks)

$$\frac{1\frac{1}{5}}{\frac{1}{8}} - \frac{1\frac{1}{3}}{\left(-\frac{1}{2}\right)^2} of 2$$

2. Find the reciprocal of 0.216 correct to 3 decimal places, hence evaluate

$$\frac{\sqrt[3]{0.512}}{0.216}$$ (3 mks)

3. Expand and simplify the expression $(2x^2 — 3y^3)^2 + 12x^2y^3$ (2 mks)

4. In the parallelogram PQRS shown below, PQ = 8 cm and angle SPQ = 30°.

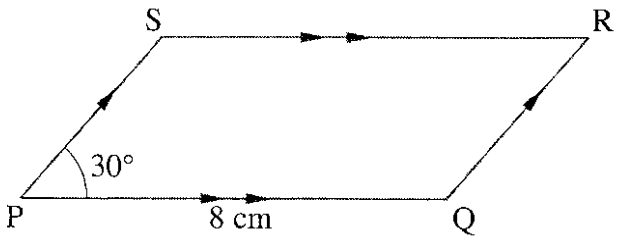

If the area of the parallelogram is 24 cm^3, find its perimeter. (3 mks)

5. Given that 92y X 2x = 72, find the values of x and *y*. (3 mks)

6. Three bells ring at intervals of 9 minutes, 15 minutes and 21 minutes. The bells will next ring together at 11.00 pm. Find the time the bells had last rang together. (3 mks)

7. Koech left home to a shopping centre 12 km away, running at 8 km/h. Fifteen minutes later, Mutua left the same home and cycled to the shopping centre at 20 km/h. Calculate the distance to the shopping centre at which Mutua caught

Prefer Calling Sir Obiero Amos @ 0706 851 439 for the Marking Schemes

up with Koech. (3 mks)

8. Using a pair of compasses and ruler only, construct a quadrilateral ABCD in which AB = 4cm, BC = *6* cm, AD = 3 cm, angle ABC = 135° and angle DAB = 60°.
Measure the size of angle BCD. (4 mks)

9. Given that OA = 2i + 3j and OB = 3i - 2j
Find the magnitude of AB to one decimal place. (3 mks)

10. Given that tan x° = 3/7 find cos (90 - *x)*° giving the answer to 4 significant figures. (2mks)

11. Given that

$$A = \begin{bmatrix} 1 & 0 \\ -1 & 3 \end{bmatrix}, B = \begin{bmatrix} 3 & 0 \\ 2 & 1 \end{bmatrix} \; and \; C \; = 2AB - A^2$$

Determine matrix C. (4 mks)

12 Without using mathematical tables or a calculator, solve the equation

$$2\log_{10}x - 3\log_{10}2 + \log_{10}32 = 2$$ (3 mks)

13. A line L passes through point (3,1) and is perpendicular to the line 2y = 4x + 5.
Determine the equation of line *L*. (3 mks)

14 . A Forex Bureau in Kenya buys and sells foreign currencies as shown below:

Currency	Buying (Ksh)	Selling (Ksh)
Chinese Yuan	12.34	12.38
South African Rand	11.28	11.37

A businesswoman from China converted 195 250 Chinese Yuan into Kenya shillings.

(a) Calculate the amount of money, in Kenya shillings, that she received. (1 mk)

(b) While in Kenya, the businesswoman spent Ksh 1 258 000 and then converted the balance into South African Rand. Calculate the amount of money, to the nearest Rand, that she received. (3 mks)

15. The figure below represents a solid cone with a cylindrical hole drilled into it. The radius of the cone is 10.5 cm and its vertical height is 15 cm. The hole has a diameter of 7 cm and depth of 8 cm.

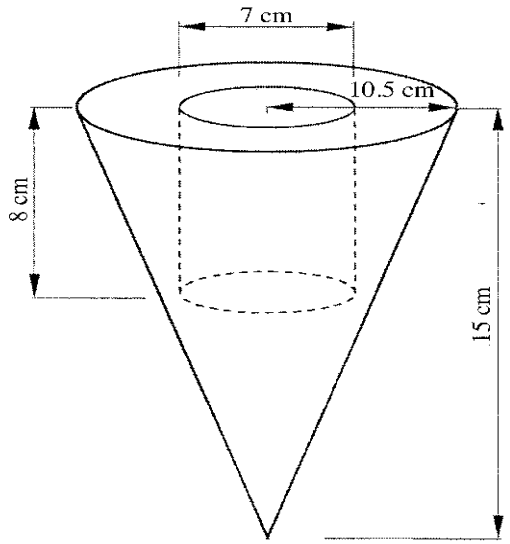

Calculate the volume of the solid. (3 mks)

16. Bukra had two bags A and B, containing sugar. If he removed 2 kg of sugar from bag A and added it to bag B, the mass of sugar in bag B would be four times the mass of the sugar in bag A. If he added 10 kg of sugar to the original amount of sugar in each bag, the mass of sugar in bag B would be twice the mass of the sugar in bag A. Calculate the original mass of sugar in each bag. (3 mks)

SECTION II (50 mks)

Answer only five questions in this section

17. The table below shows the height, measured to the nearest cm, of 101 pawpaw trees.

Height in cm.	20-24	25-29	30-34	35-39	40-44	45-49	50-54	55-59
Frequency	2	15	18	25	30	6	3	2

(a) State the modal class. (1 mk)

(b) Calculate to 2 decimal places:

(i) the mean height; (4 mks)

(ii) the difference between the median height and the mean height. (5 mks)

18. The figure below represents a solid cuboid ABCDEFGH with a rectangular base, AC= 13cm, BC = 5 cm and CH = 15cm.

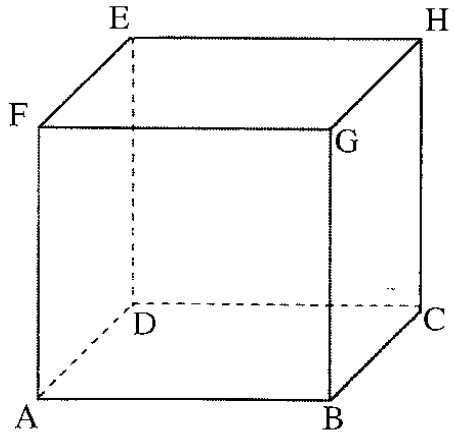

(a) Determine the length of AB, (1 mk)

(b) Calculate the surface area of the cuboid. (3 mks)

(c) Given that the density of the material used to make the cuboid is 7.6 g/cm^3, calculate its mass in kilograms. (4 mks)

(d) Determine the number of such cuboids that can fit exactly in a container measuring 1.5 m by 1.2 m by 1 m. (2 mks)

19. Two alloys, A and B, are each made up of copper, zinc and tin. In alloy A, the ratio of copper to zinc is 3:2 and the ratio of zinc to tin is 3:5.

(a) Determine the ratio, copper: zinc: tin, in alloy A. (2 mks)

(b) The mass of alloy A is 250 kg. Alloy B has the same mass as alloy A but the amount of copper is 30% less than that of alloy A.

Calculate:

(i) the mass of tin in alloy A; (2 mks)

(ii) the total mass of zinc and tin in alloy B. (3 mks)

(c) Given that the ratio of zinc to tin in alloy B is 3:8, determine the amount of tin in alloy B than in alloy A. (3 mks)

20.

a) Express $\frac{1}{x-2} - \frac{2}{x+5} = \frac{3}{x+1}$ in the form $ax^2 + bx + c = 0$

In the form of $ax^2 + bx + c = 0$, where a,. b and c are constants hence solve for x. (4 mks)

(b) Neema did y tests and scored a total of 120 mks. She did two more tests which she scored 14 and 13 mks. The mean score of the first y tests was 3 mks more than the mean score for all the tests she did. Find the total number of tests that she did. (6 mks)

21. The vertices of quadrilateral OPQR are O (0,0), P(2,0), Q(4,2) and R(0,3).

The vertices of its image under a rotation are O'(l, -1), P'(l, -3), Q'(3, -5) and R'(4, -1).

(a) (i) On the grid provided, draw OPQR and its image O'P'Q'R1. (2 mks)

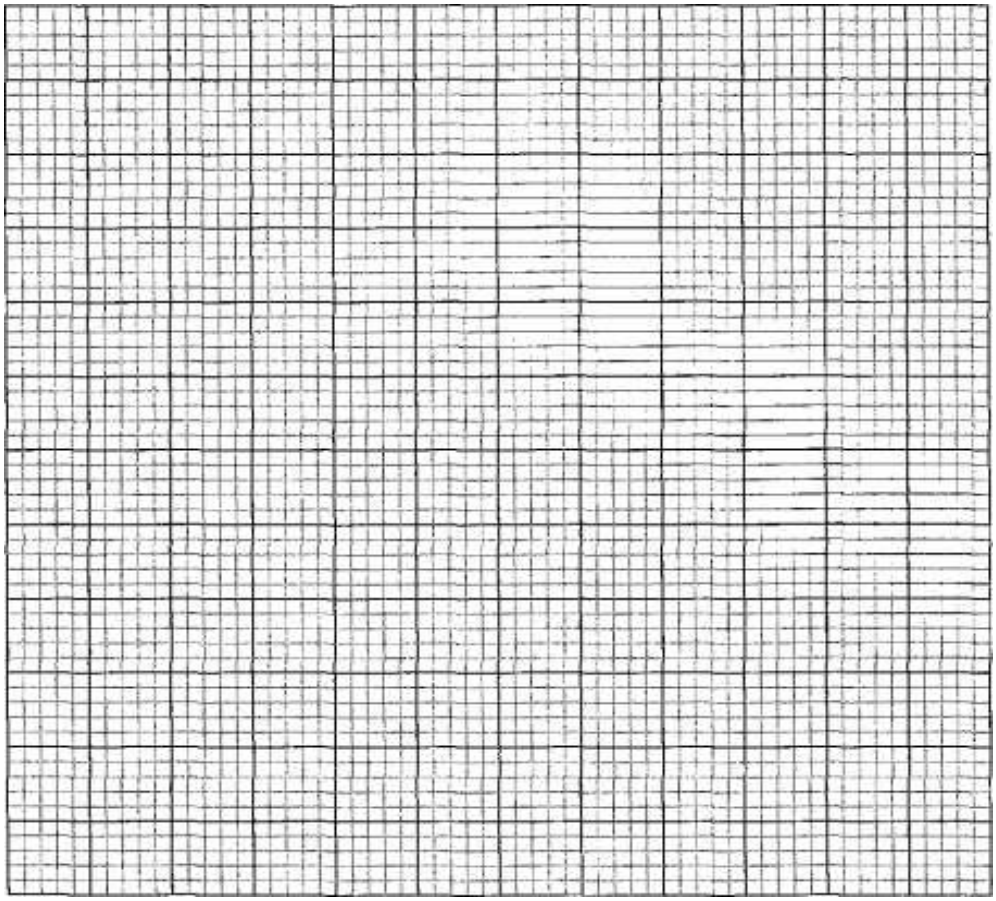

(ii) By construction, determine the centre and angle of rotation. (3 mks)

(b) On the same grid as (a) (i) above, draw O"P"Q"R", the image of O'P'Q'R' under a reflection in the line $y = x$. (2 mks)

(c) From the quadrilaterals drawn, state the pairs that are:

(i) directly congruent; (1 mk)

(ii) oppositely congruent. (2 mks)

22. The equation of a curve is $y = 2x^3 + 3x^2$.

(a) Find:

(i) the x - intercept of the curve; (2 mk)

(ii) the y - intercept of the curve. (1 mk)

(b) (i) Determine the stationery points of the curve. (3 mks)

(ii) For each point in (b) (i) above, determine whether it is a maximum or a minimum. (2 mks)

(c) Sketch the curve. (2 mks)

23. Three pegs R, S and T are on the vertices of a triangular plain field. R is 300 m from S on a bearing of 300° and T is 450 m directly south of R.

(a) Using a scale of 1 cm to represent 60 m, draw a diagram to show the positions of the pegs. (3 mks)

(b) Use the scale drawing to determine:

(i) the distance between T and S in metres: (2 mks)

(ii) the bearing of T from S. (1 mk)

(c) Find the area of the field, in hectares, correct to one decimal place. (4 mks)

24 In the figure below, PQ is parallel to RS. The lines PS and RQ intersect at T. RQ = 10 cm, RT:TQ = 3:2, angle PQT = 40° and angle RTS - 80°.

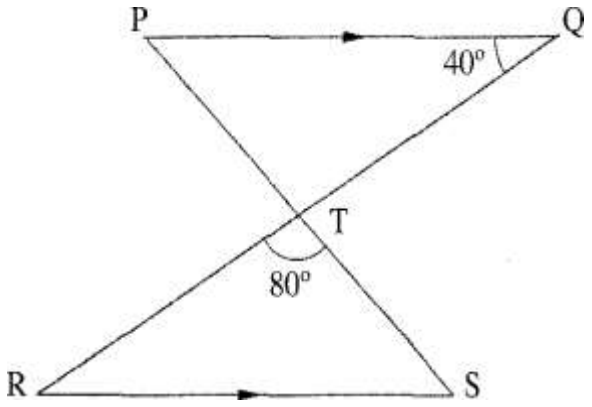

(a) Find the length of RT. (2 mks)

(b) Determine, correct to 2 significant figures:

(i) the perpendicular distance between PQ and RS; (2 mks)

(ii) the length of TS. (2 mks)

(c) Using the cosine rule, find the length of RS correct to 2 significant figures. (2 mks)

(d) Calculate, correct to one decimal place, the area of triangle RST. (2 mks)

MATHEMATICS
K.C.S.E PAPER 121/ 1 2013
QUESTIONS

Section I(50mks)

Answer all the question in the spaces provided.

1. Evaluate $\dfrac{22 - 14}{6 \times {}^{-}2} - \dfrac{4^2 \times {}^{-}6 - 12}{72 \div {}^{-}8 \times 3}$ (2 mks)

2. The production of milk, in litres, of 14 cows on a certain day was recorded as follows 22, 26, 15, 19, 20, 16, 27, 15, 19, 22, 21, 20, 22 and 28.

   a) The mode; (1 mk)
   b) The median. (2 mks)

3. Use logarithms, correct to 4 decimals places, to evaluate:

$$\sqrt[3]{\frac{1.794 \times 0.038}{1.243}}$$ (4 mks)

4. Simplify the expression:

$$\frac{16m^2 - 9n^2}{4m^2mn - 3n^2}$$ (3 mks)

5. A wholesaler sold a radio to a retailer making a profit of 20%. The retailer later sold the radio for Ksh 1,560 making a profit of 30%. Calculate the amount of money the wholesaler had paid for the radio. (3 mks)

6. A point P on the line AB shown below is such that AP = $\frac{2}{7}$ AB. By construction locate P.

(3 mks)

A ———————————————— B

7. Chelimo's clock loses 15 seconds every hour. She sets the correct time on the clock at 0700h on a Monday. Determine the time shown on the clock when the correct time was 1900h on Wednesday the same week. (3 mks)

8. Given that $\sin (x + 20)^0 = -0.7660$, find x, to the nearest degree, for $0^0 \leq x \geq 360^0$. (3 mks)

Prefer Calling Sir Obiero Amos @ 0706 851 439 for the Marking Schemes

9. A number m is formed by writing all the prime numbers between 0 and 10 in an ascending order. Another number n is formed by writing all the square numbers between 0 and 10 in a descending order:

   a) Find m – n; (2 mks)
   b) Express (m – n) as a product of its prime factors. (1 mk)

10. The figure below shows a net of a solid. (Measurements are in centimeters).

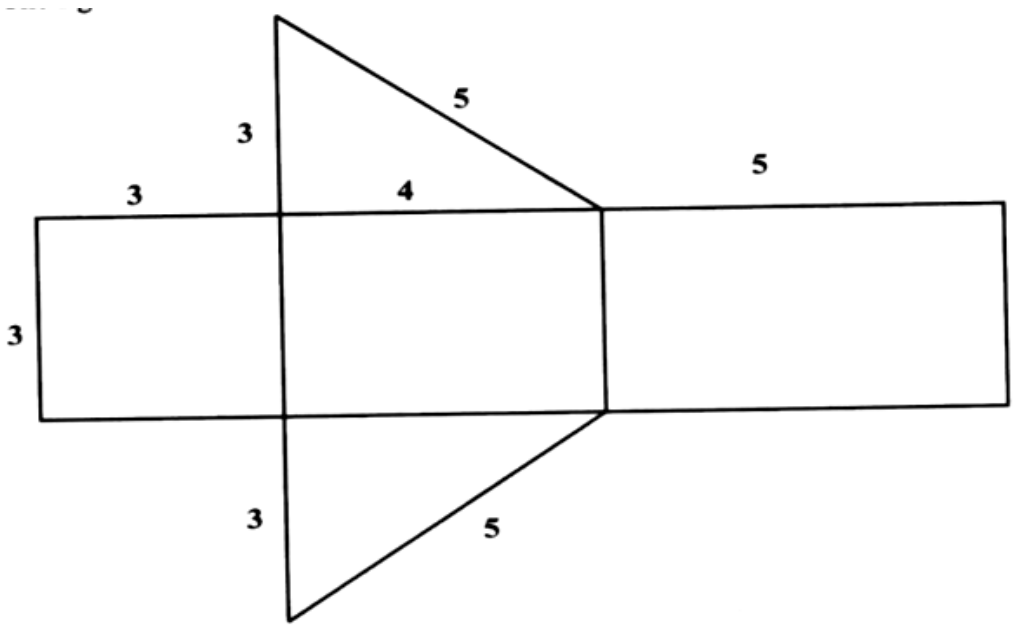

Below is a part of the sketch of the solid whose net is shown above. Complete the sketch of the solid, showing the hidden edges with broken lines. (3mks)

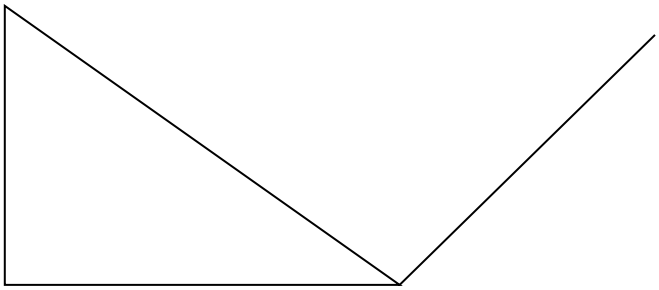

11. The interior angles of an octagon are $2x$, $\frac{1}{2}x$, $(x + 40)^0$, 110^0, 135^0, 160^0, $(2x + 10^0)$ and 185^0.
    Find the value of x. (2 mks)

12. A straight line passes through points (-2, 1) and (6, 3).
Find:
a) equation of the line in the form y = mx + c; (2 mks)

b) the gradient of a line perpendicular to the line in (a) (1 mk)

13. A triangle ABC is such that AB = 5 cm, BC = 6 cm and AC = 7 cm.

a) Calculate the size of angle ACB, correct to 2 decimal places. (2 mks)

b) A perpendicular drawn from A meets BC at N. calculate the length AN correct to one decimal place. (2 mks)

14. A cylindrical pipe 2 ½ metres long has an internal diameter of 21 millimetres and an external diameter of 35 millimetres. The density of the material that makes the pipe is 1.25 g/cm^3.
Calculate the mass of mass of the pipe in kilograms. (Take $\pi = \frac{22}{7}$). (4 mks)

15. The figure below represents a pentagonal prism of length 12 cm.The cross-section is a regular pentagon of side 5 cm.

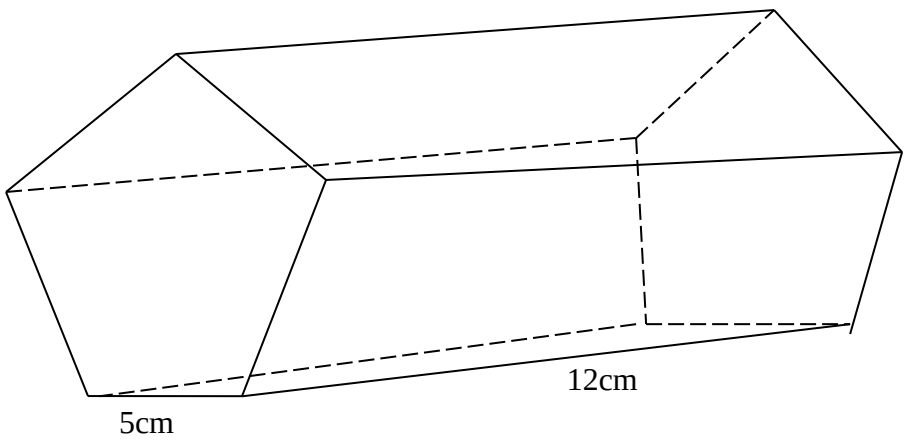

Calculate the surface area of the prism correct to 4 significant figures. (4 mks)

16. Given the inequalities $x - 5 \leq 3x - 8 < 2x - 3$.

a) Solve the inequalities; (2 mks)

b) Represent the solution on a number line. (1 mk)

SECTION II (50 mks)

Answer only five questions in this section

17. A farmer had 540 bags of maize each having a mass of 112kg. After drying the maize, the mass decreased in the ratio 15:16.

    a) Calculate the total mass lost after the maize was dried. (3 mks)

    b) A trader bought and repacked the dried maize in 90 kg bags. He transported the maize in a lorry which could carry a maximum of 120 bags per trip.

        i. Determine the number of trips the lorry made. (3 mks)

        ii. The buying price of a 90 kg bag of maize was Ksh 1,500. The trader paid Ksh 2,500 per trip to the mket. He sold the maize and made a profit of 26 %. Calculate the selling price of each bag of the maize. (4 mks)

18. (a) solve the equation, $\frac{x+3}{24} = \frac{1}{x-2}$

    (b) The length of a floor of a rectangular hall is 9m more than its width. The area of the floor is $136m^2$.

        i. Calculate the perimeter of the floor. (4 mks)

        ii. A rectangular carpet is placed on the floor of the hall leaving an area of $64m^2$. If the length of the carpet is twice its width, determine the width of the carpet. (2 mks)

19. A trader bought 2 cows and 9 goats for a total of Ksh 98, 200. If she had bought 3 cows and 4 goats she would have spent Ksh 2,200 less.

    a) Form two equations to represent the above information. (2 mks)

    b) Use matrix method to determine the cost of a cow and that of a goat. (4 mks)

    c) The trader later sold the animals she had bought making a profit of 30% per cow and 40% per goat.

        i. Calculate the total amount of money she received. (2 mks)

ii. Determine, correct to 4 significant figures, the percentage profit the trader made from the sale of the animals (2 mks)

20. Two towns, A and B are 80km apart. Juma started cycling from town A to town B at 10.00 am at an average speed of 40 km/h. Mutuku started his journey from town B to town A at 10.30 am and travelled by car at an average speed of 60 km/h.

a) Calculate:

i. The distance from town A when Juma and Mutuku met; (5 mks)

ii. The time of the day when the two met. (2 mks)

b) Kamau started cycling from town A to town B at 10.21 am. He met Mutuku at the same time as Juma did. Determine Kamau's average speed. (3 mks)

21. The displacement, s metres, of a moving particle from a point O, after t seconds is given by, $s = t^3 - 5t^2 + 3t + 10$.

a) Find s when t =2. (2 mks)

b) Determine:

i. The velocity of the particle when t = 5 seconds; (3 mks)

ii. The value of t when the particle is momentarily at rest. (3 mks)

c) Find the time, when the velocity of the particles is maximum. (2 mks)

22. In the figure below, OABC is a trapezium. AB parallel to OC and OC = 5 AB. D is a point on OC such that OD: DC = 3:2

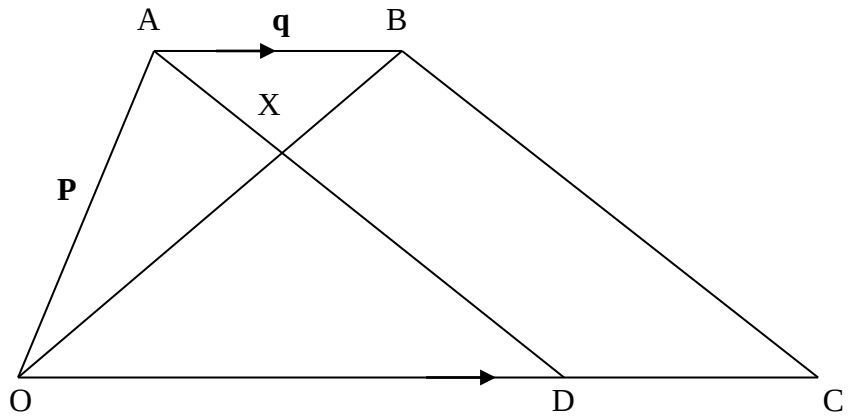

a) Given that **OA** = **p** and **AB** = **q**, express in terms of **p** and **q**:

i. **OB**; (1 mks)

ii. **AD**; (2 mks)

iii. **CB**; (2 mks)

b) Lines OB and AD intersect at point X such that AX = kAD and OX = rOB, where k and r are scalars. Determine the values k and r. (5 mks)

23. (a) On the grid provided, draw the square whose verticals are A (6, -2), B (7, -2), C (7, -1) and D (6, -1). (1 mk)

(b) On the same grid, draw:

i. A′B′C′D′, the image of ABCD, under an enlargement scale factor 3, centre (9, -4); (3 mks)

ii. A″B″C″D″, the image of A′B′C′D′, under a reflection in the line $x = 0$; (2 mks)

iii. A‴B‴C‴D‴, the the image of A″B″C″D″ under a rotation of $+90^0$ about (0,0) (2 mks)

(c) Describe a single transformation that maps A′B′C′D′ onto A‴B‴C‴D‴ (2 mks)

24. The figure below represents a cone of height 12 cm and base radius of 9 cm from which a similar smaller cone is removed, leaving a conical hole of height 4 cm.

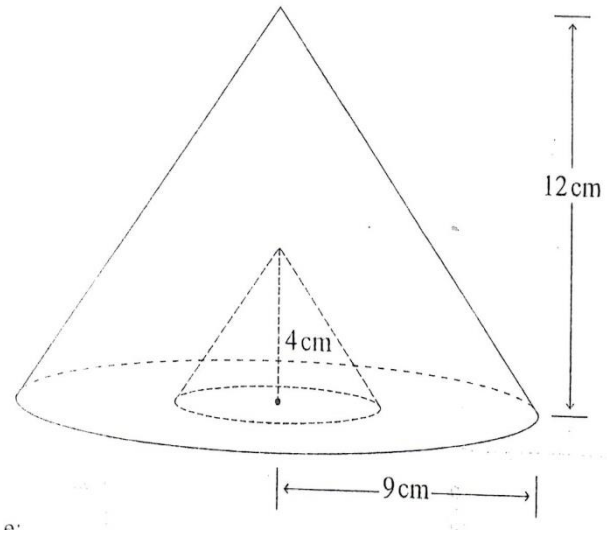

a) Calculate:

i. The base radius of the conical hole; (2 mks)

ii. The volume, in terms of π, of the smaller cone that was removed. (2 mks)

b) (i) Determine the slant height of the original cone. (1 mk)

MATHEMATICS

K.C.S.E PAPER 121/ 1 2014

QUESTIONS

SECTION 1 (50 MKS)

Answer all the questions in this section in the spaces provided.

1. Ntutu had cows, sheep and goats in his farm the number of cows was 32 and number of sheep was twelve times the number of cows. The number of goats was 1344 more than the number of sheep. If he sold $\frac{3}{4}$ of the goats, find the number of goats that remained. (4mks)

2. Use the prime factors of 1764 and 2744 to evaluate (3mks)

$$\frac{\sqrt{1764}}{\sqrt[3]{2744}}$$

3. The mass of solid cone of radius 14cm and height 18cm is 4.62kg. find its density in g/cm^3

(3mks)

4. The figure below represents a triangular prism ABCDEF. X is a point on BC.

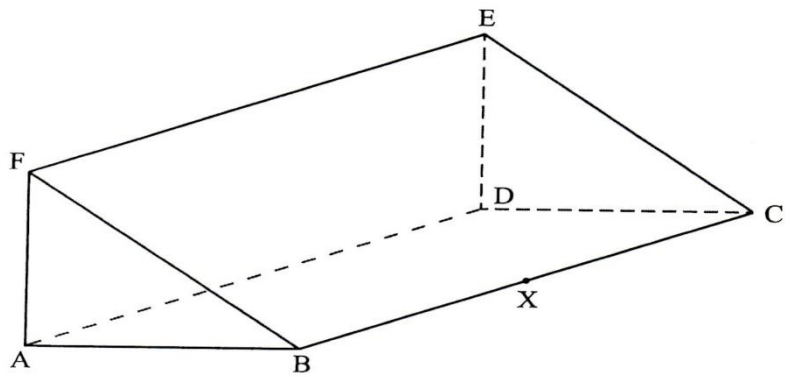

(a) Draw a net of the prism. (2mks)

(b) Find the distance DX. (1mk)

5. A business man makes a profit of 20% when he sells a carpert for Ksh 36000. In a trade fair he sold one such carpet for Ksh 33600. Calculate the percentage profit made on the sale of the carpet during the trade fair. (3mks)

6. Simplify $\frac{243^{\frac{-2}{5}} \times 125^{\frac{2}{3}}}{9^{\frac{-3}{2}}}$ (3mks)

Prefer Calling Sir Obiero Amos @ 0706 851 439 for the Marking Schemes

7. The area of a sector of a circle, radius 2.1cm, is $2.31cm^2$. The arc of the sector subtends an angle θ, at the centre of the circle. Find the value of θ in radians to 2 correct decimal places (2mks)

8. Expand and simplify $(x + 2y)^2 - (2y - 3)^2$ (2mks)

9. A plane leaves an airstrip L and flies on a bearing of 040^0 to airstrip M, 500km away. The plane then leaves on a bearing of 316^0 to airstrip N. The bearing of N from L is 350^0. By scale drawing, determine the distance between airstrips M and N. (4mks)

10. The sum of interior angles of a regular polygon is 18000. Find the size of each exterior angle (3mks)

11. A cow is 4 years 8 months older than a heifer. The product of their ages is 8 years. Determine the age of the cow and that of the heifer. (4mks)

12. Solve $4 \leq 3x - 2 < 9 + x$ hence list the integral value that satisfies the inequality. (3mks)

13. The figure below shows a rectangular container of dimensions 40cm by 25cm by 90cm. a cylindrical pipe of radius 7.5cm is fitted in the container as shown.

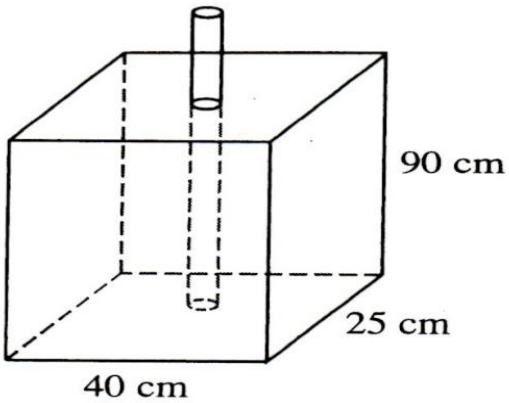

Water is poured into the container in the space outside the pipe such that the water level is 80% the height of the container. Calculate the amount of the water, in litres, in the container in 3 significant figures. (4mks)

14. A minor arc of a circle subtends an angle of 1050 at the centre of the circle. If the radius of the circle is 8.4cm, find the length of the major arc (take $\pi = \frac{22}{7}$) (3mks)

15. Twenty five machines working at a rate of 9 hours per day can complete job in 16 days. A contractor intends to finish the job in 10days using similar machines working at a rate of 12 hours per day. Find the number of machines the contractor requires to complete the job. (3mks)

16. Points A(-2, 2) and B(-3, 7) are mapped onto A′(4, -10) and B′(0, 10) by an enlargement. Find the scale factor of the enlargement. (3mks)

SECTION II (50 MKS)
Answer only five questions in this section in the spaces provided.

17. A line L passes through (-2, 3) and (-1, 6) and is perpendicular to a line P at (-1, 6).

(a) Find the equation of L (2mks)

(b) Find the equation of P in the form $ax + by = c$,where a, b and c are constants. (2mks)

(c) Given that another line Q is parallel to L and passes through point (1, 2) find the x and y intercepts of Q (3mks)

(d) Find the point of the intersection of lines P and Q (3mks)

18. The lengths, in cm, of pencils used by pupils in a standard one class on a certain day were recorded as follows.

3	7	9	9	20	14	10	6	8	13
14	3	17	13	8	12	5	15	14	15
7	12	11	6	10	19	9	14	6	9
10	16	13	9	12	11	10	7	10	11

(a) Using a class width of 3, and starting with the shortest length of the pencils, make a frequency distribution table for the data.

(b) Calculate:
(i) The mean length of the pencils (3mks)
(ii) The percentage of pencils that were longer than 8cm but shorter than 15cm. (2mks)

(c) On the grid provided, draw a frequency polygon for the data (3mks)

19. The figure below represents a speed time graph for a cheetah which covered 825m in 40 seconds.

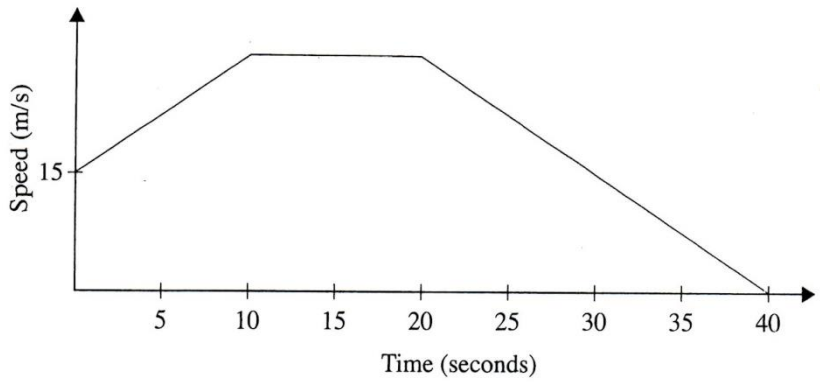

(a) State the speed of the cheetah when recording of its motion started (1 mk)

(b) Calculate the maximum speed attained by the cheetah (3mks)

(c) Calculate the acceleration of the cheetah in:

(i) The first 10 seconds (2mks)

(ii) The last 20 seconds (1mk)

(d) Calculate the average speed of the cheetah in first 20 seconds (3mks)

20. The figure below shows a right pyramid VABCDE. The base ABCDE is regular pentagon. AO = 15cm and VO = 36 cm.

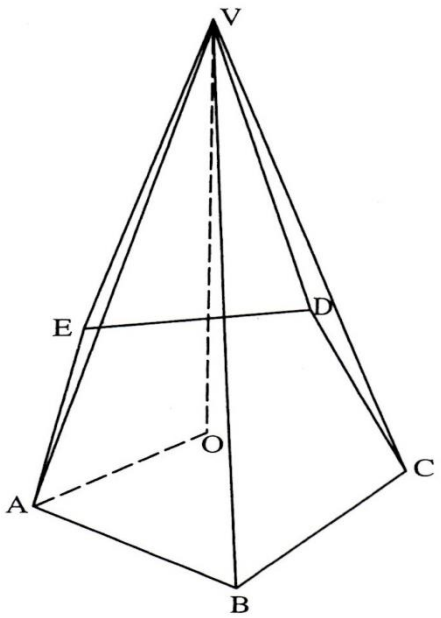

Calculate:

(a) The area of the base correct to 2decimal places (3mks)

(b) The length AV (1mk)

(c) The surface area of the correct to 2decimal places (4mks)

(d) The volume of the pyramid correct to 4 significant figures (2mks)

21.

(a) Complete the table below for the function y = x2 – 3x + 6 in range $-2 \leq x \leq 8$ (2mks)

x	-2	-2	0	1	2	3	4	5	6	7	8
y											

(b) Use the trapezium rule with strips to estimate the area bounded by the curve, $y = x^2 - 3x + 6$, the lines $x = -2$, $x = 8$, and x - axis (3mks)

(c) Use the mid-ordinate rule with 5 strips to estimate the area bounded by the curve, $y = x^2 - 3x + 6$, the lines $x = -2$, $x = 8$, and x –axis (2mks)

(d) By integration, determine the actual area bounded by the curve $y = x^2 - 3x + 6$, the lines $x = -2$, $x = 8$, and x –axis (3mks)

22. Using a pair of compasses and a ruler only, construct

(a)

(i) Triangle ABC in which AB =5cm, <BAC = 30^0 and <ABC = 105^0 (3mks)

(ii) A circle that passes through the vertices of the triangle ABC. Measure the radius (3mks)

(iii) The height of triangle ABC WITH AB as the base. Measure the height (2mks)

(b) Determine the area of the circle that lies outside the triangle correct to 2decimal places (2mks)

23. The figure below represents a piece of land in the shape of a quadrilateral in which

AB =240M, BC = 70m CD = 200m <BCD = 150^0 <ABC = 90^0

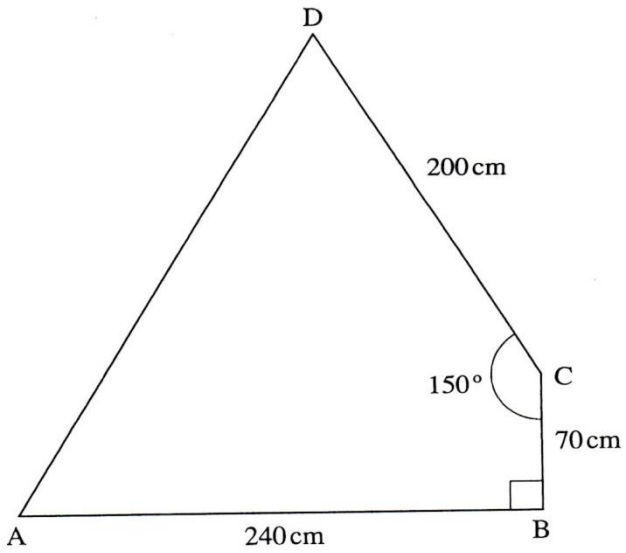

Calculate

(a) The size of <BAC correct to 2decimal places (2mks)

(b) The length AD correct to one decimal place (4mks)

(c) The area of the piece of land, in hectares, correct to 2 decimal places (4mks)

24. The equation of acurve is given by $y = x^3 - 4x^2 - 3x$

(a) Find the value of y when x = -1 (1mk)

(b) Determine the stationary points of the curve (5mks)

(c) Find the equation of the normal to the curve at x = 1 (4mks)

MATHEMATICS

K.C.S.E PAPER 121/ 1 2015

QUESTIONS

SECTION I (50 marks)

Answer all the questions in this section

1. (a) Evaluate 540396-726450÷3. (1 mk)

   (b) Write the total value of the digit in the thousands place of the results obtained in (a) above. (1 mk)

2 Muya had a $6^2/_3$ ha piece of land. He donated $^7/_8$ ha to a school and $1^1/_2$ ha to a children's home. The rest of the land was shared equally between his son and daughter. Find the size of land that each child got. (3 mks)

3 The volume of a cube is 1728 cm^3. Calculate, correct to 2 decimal places, the length of the diagonal of a face of the cube. (3 mks)

4 Use logarithms, correct to 4 significant figures, to evaluate $\sqrt{\frac{72.56 \text{ X } 0.64}{(1.845)^2}}$

(4 mks)

5. A piece of wire is bent into the shape of an isosceles triangle. The base angles are each 48° and the perpendicular height to the base is 6 cm. Calculate, correct to one decimal place, the length of the wire. (3 mks)

6. The density of a substance A is given as 13.6 g/cm^3 and that of a substance B as 11.3 g/cm^3. Determine, correct to one decimal place, the volume of B that would have the same mass as 50cm^3 of A. (3 mks)

7 Below is part of a sketch of a solid cuboid ABCDEFGH. Complete the sketch

(2 mks)

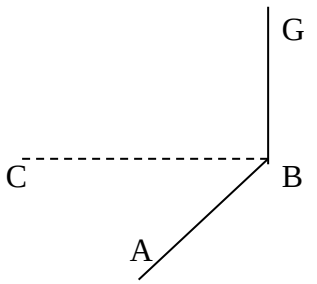

Prefer Calling Sir Obiero Amos @ 0706 851 439 for the Marking Schemes

8.

A salesman is paid a salary of Ksh 15, 375 per month. He also gets a commission of $4^1/_2$ % on the amount of money he makes from his sales. In a certain month, he earned a total of Ksh 28 875

Calculate the value of his sales that month. (3 mks)

9 The sum of interior angles of a regular polygon is 24 times the size of the exterior angle.

(a) Find the number of sides of the polygon. (3 mks)

(b) Name the polygon (1 mk)

10. The marks scored by a group of students in a test were recorded as shown in the table below

Marks	30-34	35-39	40-44	45-49	50-54	55-59	60-64
No. Of students	3	6	5	12	8	9	7

On the grid provided, and on the same axes, represent the above data using

a) a histogram; (3 mks)

b) a frequency polygon (1 mk)

11. Given that P = 5a – 2 b where a = $\begin{pmatrix} \mathbf{3} \\ \mathbf{2} \end{pmatrix}$ and b = $\begin{pmatrix} \mathbf{4} \\ \mathbf{1} \end{pmatrix}$ find

a) Column vector p (2 mks)

b) P', the image P under translation vector $\begin{pmatrix} \mathbf{-6} \\ \mathbf{4} \end{pmatrix}$ (1 mk)

12. Given that a = 3, b = 5 and c = - ½ evaluate

$$\frac{\mathbf{4\,a^2 + 2b - 4c}}{\mathbf{\frac{1}{4}(b^2 - 3a)}}$$ (3 mks)

13. The figure below represents the curve of an equation

Use the mid-ordinate rule with 4 ordinates to estimate the area bounded by the curve, lines y — 0, x = — 3 and x = 5. (3 mks)

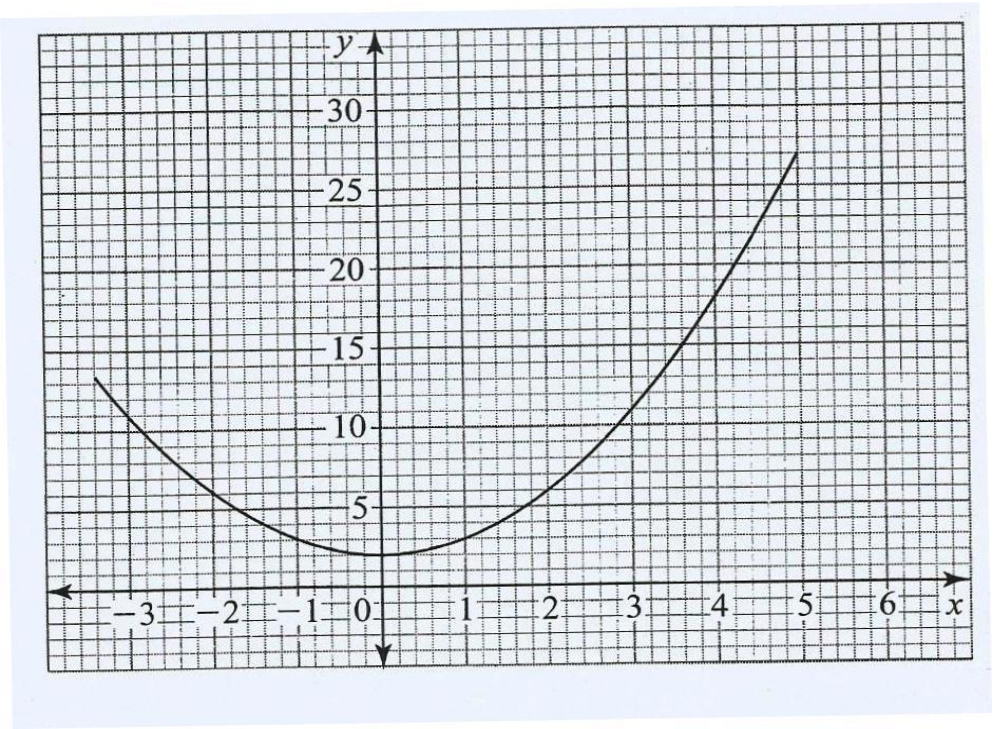

14 The cost of 2 jackets and 3 shirts was Ksh 1800. After the cost of a jacket and that of a shirt were increased by 20%, the cost of 6 jackets and 2 shirts was Ksh 4 800. Calculate the new cost of a jacket and that of a shirt. (4 mks)

15 A tailor had a piece of cloth in the shape of a trapezium. The perpendicular distance between the two parallel edges was 30cm. The lengths of the two parallel edges were 36 cm and 60cm. The tailor cut off a semi circular piece of the cloth of radius 14cm from the 60cm edge.

Calculate the area of the remaining piece of cloth. (Take $\pi = \frac{22}{7}$ (3 mks)

16 Musa cycled from his home to a school 6km away in 20 minutes. He stopped at the school for 5 minutes before taking a motorbike to a town 40km away. The motorbike travelled at 75km/h. On the grid provided, draw a distance-time graph to represent Musa's journey. (3 mks)

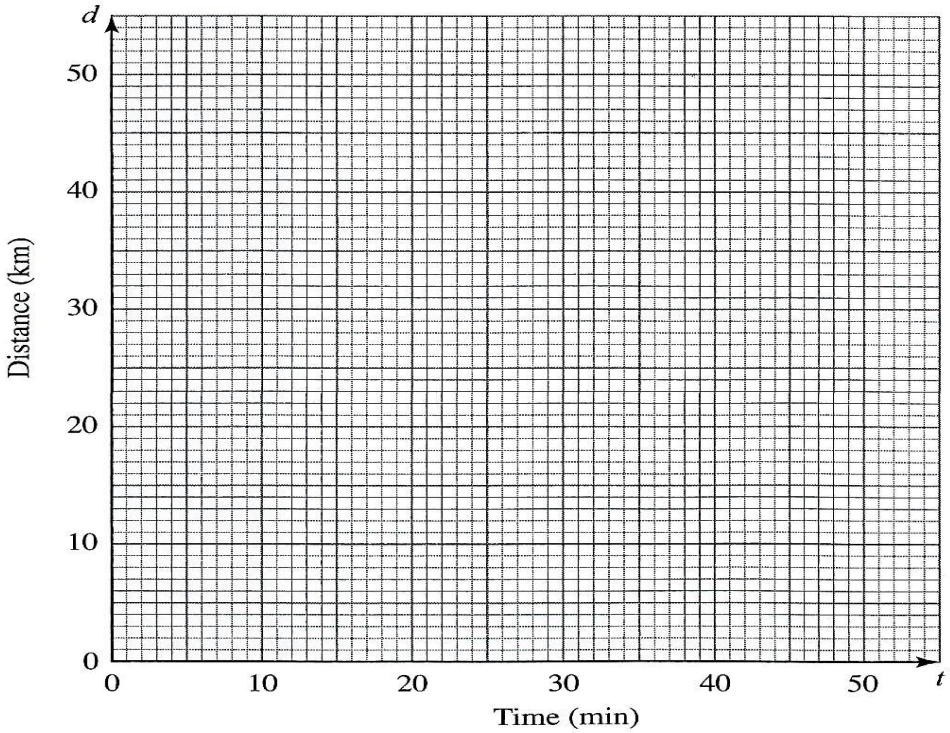

SECTION II (50 marks)

Answer any five questions in this section

17 Three partners Amina, Bosire and Karuri contributed a total of Ksh 4 800 000 in the ratio 4:5:7 to buy an 8 hectares piece of land. The partners set aside $^1/_4$of the land for social amenities and sub-divided the rest into 15 m by 25 m plots.

(a) Find:

(i) the amount of money contributed by Karuri; (2 mks)

(ii) the number of plots that were obtained. (3 mks)

(b) The partners sold the plots at Ksh 50 000 each and spent 30% of the profit realised to pay for administrative costs. They shared the rest of the profit in the ratio of their contributions.

(i) Calculate the net profit realised. (3 mks)

(ii) Find the difference in the amount of the profit earned by Amina and Bosire. (2 mks)

18 Two shopkeepers, Juma and Wanjiku bought some items from a wholesaler. Juma bought 18 loaves of bread, 40 packets of milk and 5 bars of soap while Wanjiku bought 15 loaves of bread, 30 packets of milk and 6 bars of soap. The prices of a loaf of bread, a packet of milk and a bar of soap were Ksh 45, Ksh 50 and Ksh 150 respectively.

(a) Represent:

(i) the number of items bought by Juma and Wanjiku using a 2 x 3 matrix. (1 mk)

(ii) the prices of the items bought using a 3 x 1 matrix. (1 mk)

(b) Use the matrices in (a) above to determine the total expenditure incurred by each person and hence the difference in their expenditure. . (3 mks)

c) Juma and wanjiku also bought rice and sugar. Juma bought 36 kgs of rice and 23 kgs of sugar and paid Ksh 8160. Wanjiku bought 50 kg of rice and 32 kg of sugar and paid kshs 11340. Use the matrix method to determine the price of one kilogram of rice and one kilogram of sugar (5 mks)

19 Line AB drawn below is a side of a triangle ABC.

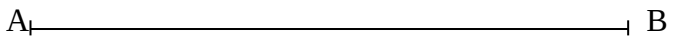

(a) Using a pair of compasses and ruler only construct:

(i) triangle ABC in which BC = 10cm and ZCAB = 90°; (2 mks)

(ii) a rhombus BCDE such that ZCBE = 120°; (2 mks)

(iii) a perpendicular from F, the point of intersection of the diagonals of the rhombus, to meet BE at G. Measure FG; (2 mks)

(iv) a circle to touch all the sides of the rhombus. (1 mk)

b) Determine the area of the region in the rhombus that lies outside the circle (3 mks)

20. In the figure below, AC = 12cm, AD =15 cm and B is point on AC, <BAD= DB=30^0.

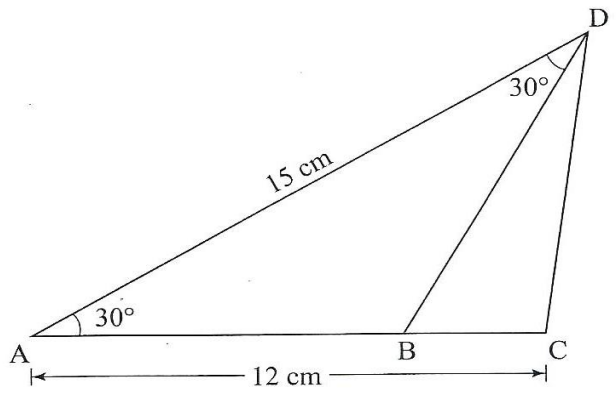

Calculate , correct to one decimal place

a) The length of CD: (3 mks)

b) The length of AB (3 mks)

c) The area of triangle BCD (2 mks)

d) The size of <BDC (2 mks)

21 (a) A straight line L, whose equation is 3y — 2x = —2 meets the x-axis at R. Determine the co-ordinates of R. (2 mks)

b) A second line L_2 is perpendicular to L_1 at R. Find the equation of L_2 in the form $y = mx + c$, where m and c are constants. (3 mks)

(c) A third line L_3 passes through (—4,1) and is parallel to L_2 Find:

(i) the equation of L_3 in the form y = mx + c, where m and c are constants (2 mks)

(ii) the co-ordinates of point S, at which L intersects L (3 mks)

22. On the grid below, an object T and its image T' are drawn

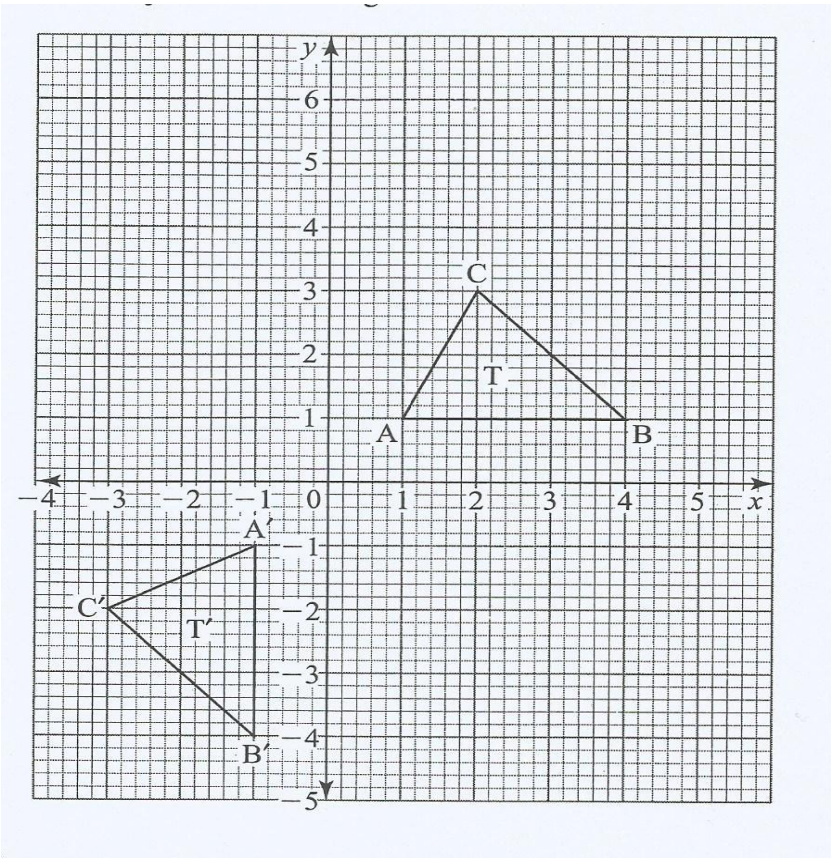

a) Find the equation of the mirror lien that maps T onto T′. (1 mk)

b i)T′ is mapped onto T″ by positive quarter turn about (0,0). Draw T″ (2 mks)

ii) Describe a single transformation that maps T onto T″ (2 mks)

c) T″ is mapped onto T‴ by an enlargement, centre (2,0), scale factor -2 .
Draw T‴ (2 mks)

d) Given that he area of T‴ is $12cm^2$, calculate the area of T‴ . (3 mks)

23. The figure below represents a conical flask. The flask consists of a cylindrical part and a frustum of a cone. The diameter of the base is 10cm while that of the neck is 2 cm. the vertical height of the flask is 12cm.

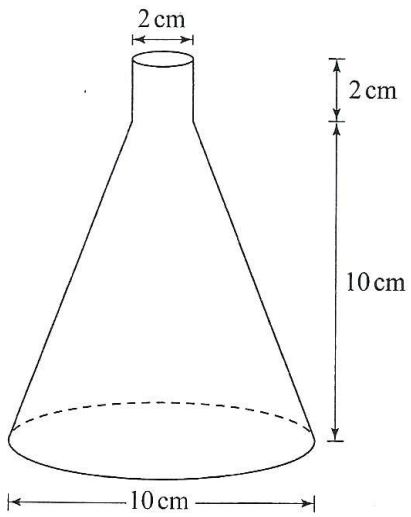

Calculate, correct to 1 decimal place

a) The slant height of the frustum part (2 mks)

b) The slant height of the smaller cone that was cut off to make the frustum part (2 mks)

c) The external surface area of the flask. (Take $\boldsymbol{\pi = 3.142}$) (6 mks)

24. The gradient of the curvey $y = 2x^3 - 9x^2 + px - 1$ at $x = 4$ is 36.

a)Find :

i) the value of *p*; (3 mks)

ii)The equation of the tangent to the curve at $x = 0.5$. (4 mks)

b) Find the coordinates of the training points of the curve (3 mks)

MATHEMATICS

K.C.S.E PAPER 121/ 1 2016

QUESTIONS

SECTION 1 (50 MKS)

Answer all the questions from this section in the spaces provided

1. Without using a calculator evaluate. $\frac{-2(5+3)-9\div3+5}{-3x-5+-2\,x\,4}$ (3mks)

2. Simplify $\frac{P^2+2\,pq\ +q^2}{p^3-pq^2+p^2q-q^3}$ (4 mks)

3. The external length, width and height of an open rectangular container are 41 cm and 15.5 cm respectively. The thickness of the materials making the container is 5mm. if the container has 8 lit res of water, calculate the internal height above the water level. (4 mks)

4. The figure below shows a net of a solid (measurements are in centimeters)

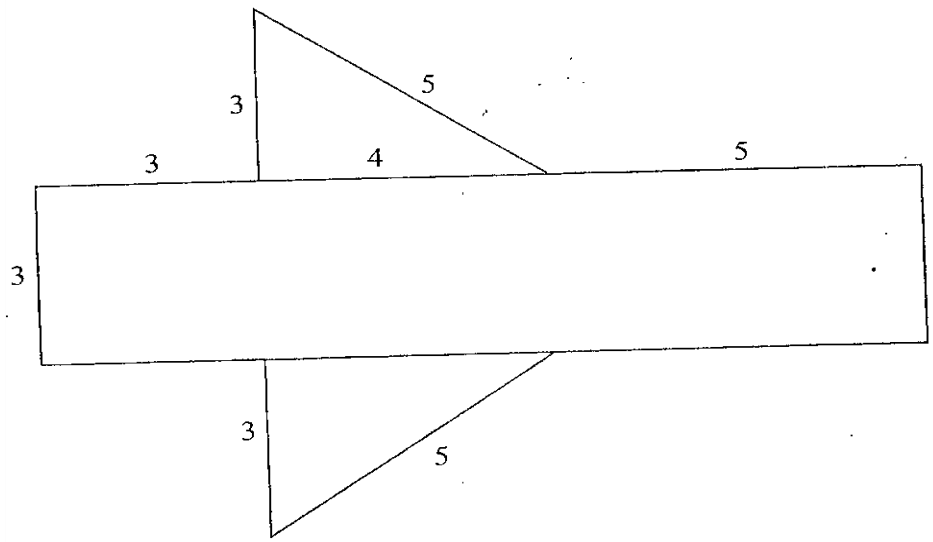

Below is a part of the sketch of the solid whose net is shown above. Complete the sketch of the solid, showing the hidden edges with broken lines (3 mks)

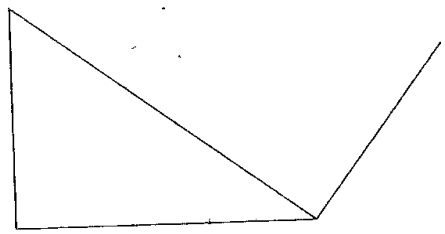

5. Give that OA =2i a + 3 j and OB = 3i -2j, find the magnitude of AB to one decimal place (3 mks)

6. A bus travelling at an average speed of 63 km / h left a station at 8:15 am. A car later left the same station at 9.00 am and caught up with the bus at 10.45 am. Find the average speed of the car. (3 mks)

7. Given that x is an acute angle and cos $x^0 = {}^2/_5\sqrt{5}$ find, without using mathematical tables or a calculator, tan $(90\text{-}x)^0$.

8. Without using mathematical tables or a calculator, evaluate $27^{\frac{2}{3}} \times \left(\frac{81}{16}\right)^{-\frac{1}{4}}$ (3 mks)

9. A minor arc of a circle subtends an angle of 1050 at the centre of the circle. If the radius of the circle is 8.4 cm, find the length of the major arc (Take $\pi = \frac{22}{7}$). (3mks)

10. The gradient of the tangent to the curve $y = ax^3 + bx$ at the point (1,1) is -5 , Calculate the values of a and b. (4 mks)

11. A line with gradient of -3 passes through the points (3 , k) and (k, 8). Find the value of k and hence express the equation of the line in the form ax + by = c , where a, b and c are constant (3 mks)

12. Points L and M are equidistant from another point K.; The bearing of L form K is 330^0. The bearing of M from K is 220^0.
Calculate the bearing of M from L (3 mks)

13. In this question, mathematical tables should not be used.

A Kenyan bank buys and sells foreign currencies as shown below:

	Buying (In Kenya Shillings)	Selling (In Kenya Shillings)
1 Hong Kong Dollar	9.74	9.77
1 South African Rand	12.03	12.11

A tourist arrived in Kenya with 105 000 Hong Kong Dollars and changed the whole amount to Kenya Shillings. While in Kenya, she spent Sh 403 879 and changed the balance to South African Rands before leaving for South Africa. Calculate the amount in South African Rand, that she received, (3 mks)

14. A small cone of height 8cm is cut off from a bigger cone to leave a frustum of height 16cm. If. the volume of the smaller cone is $160cm^3$, find the volume of the frustum. (3 mks)

15. The production of milk, in litres, of 14 cows on a certain day was recorded as follows:
22, 26, 15, 19, 20, 16,27, 15, 19, 22, 21, 20, 22 and 28.
Determine:
(a) the mode; (1 mk)
(b) the median. (2 mks)

16. Given that Log 4 = 0.6021 and log 6 = 0.7782, without using mathematical tables on a calculator, evaluate log 0.096. (3 mks)

SECTION II(50 MKS)

Answer any Give questions from this section in the spaces provided.

17.a)Solve the equation $\frac{X+3}{24} = \frac{1}{x-2}$ (4mks)

b) The length of a floor of a rectangular hall is 9m more than its width. The area of the floor is $136m^2$.

i)Calculate the perimeter of the floor (4 mks)

ii)A rectangular carpet is placed on the floor of the wall leaving an area of $64m^2$. If the length of a carpet is twice its width, determine the width of the carpet.

18. Three business partners: Asha, Nangila and Cherop contributed Ksh 6 000, Ksh 85 000 and Ksh 105 000 respectively. They agreed to put 25% of the profit back into business each year. They also agreed to put aside 40% of the remaining profit to cater for taxes and insurance. The rest of the profit would then be shared among the partners in the ratio of their contributions. At the end of the first year, the business realised a gross profit of Ksh 225 000.

(a) Calculate the amount of money Cherop received more than Asha at the end of the first year. (5 mks)

(b) Nangila further invested Ksh 25 000 into the business at the beginning of the second year. Given that the gross profit at the end of the second year increased in the ratio10:9 calculate Nangila's share of the profit at the end of the second year. (5 mks)

19. The frequency table below shows the daily wages paid to casual workers by a certain company

wages in shillings	100-150	150-200	200-300	300-400	400-600
no. of workers	160	120	380	240	100

a) In the grid provided, draw a histogram to represent the above information (5mks)

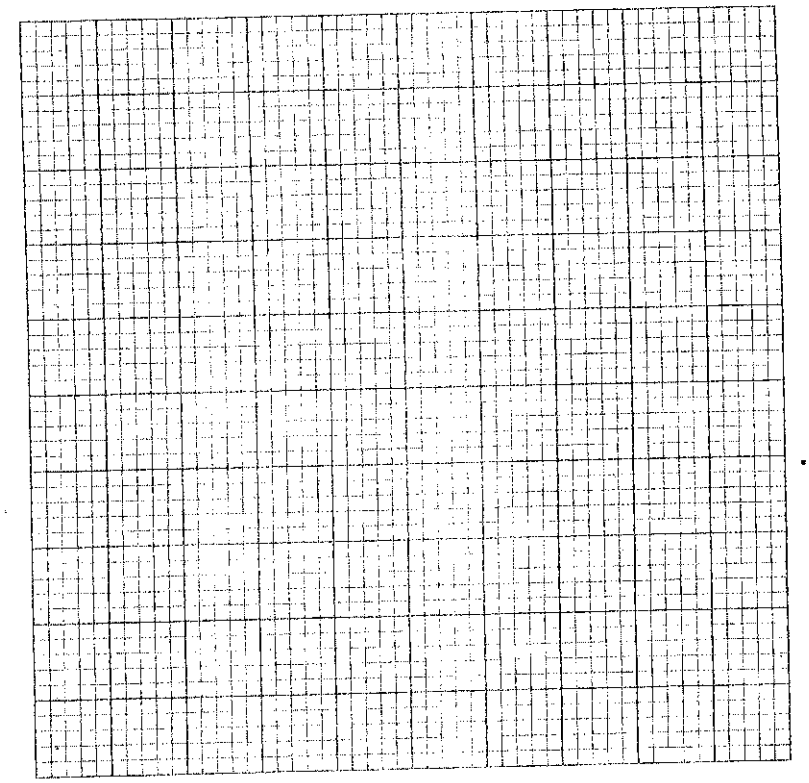

bi)State the class in which the median wage lies (1mk)

ii) Draw a vertical line, in the histogram, showing where the median wage lies (1 mk)

c) Using the histogram, determine the number of workers who earn shs 450 or less per day (3 mks)

20. In the diagram below, the coordinates of points A and B are (1,6) and (15, 6) respectively. Point N is on OB and that 30N = 20B. Line OA is produced to L such that OL = 30 A.

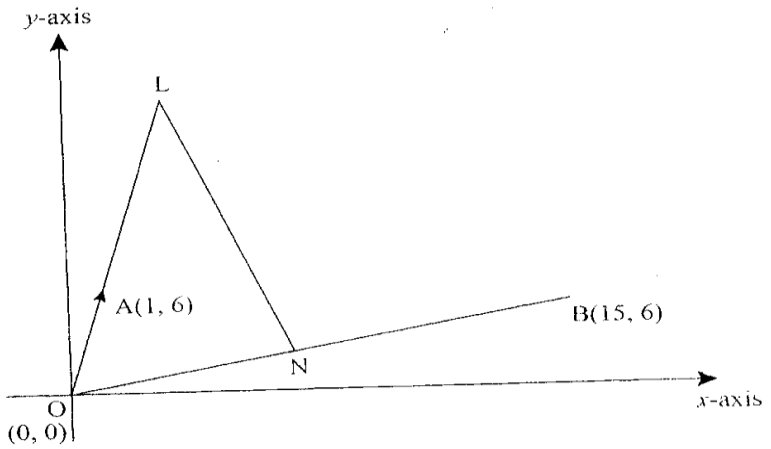

a)Find vector LN (3 mks)

b) Given that a point M is on LN such that LM: MN = 3: 4 find the coordinate of M (2 mks)

c) If line OM is produced to T such a that OM: MT= 6:1

i)Find the position vector of T (1 mk)

ii) Show that points L, T and B are collinear ` (4 mks)

21. a)The ratio of Jumas and Akinyis earning was 5:3. Jumas earnings rose to Kshs 8400 after an increase of 12%

Calculate the percentage increase in Akinyis earnings given that the sum of their new earnings was kshs 14,100. (6mks)

b) Juma and Akinyi contributed all the new earnings to buy maize at Kshs 1175 per bag. The maize was then sold at Kshs 1762.50 per bag. The two shared all the money from the sales of the maize in the ratio of their contributions.

Calculate the amount hat Akinyi got. (4 mks)

21. Using a pair of compasses and ruler only, construct

A i)Triangle ABC in which AB= 5 cm, <BAC=30^0 and <ABC = 105^0. (3 mks)

ii)A circle that passes through he vertices of the triangle ABC. Measure the radius (3 mks)

iii)the height of triangle ABC with AB as the base. Measure the height (2 mks)

b) Determine the area of circle that lies outside the triangle correct to 2 decimal places (2 mks)

23. The equation of a curve is $y = 2x^3 + 3x^2$.

a)Find

i)The x – intercept of the curve (2mks)

ii) they-intercept of the curve (1mk)

b i)Determine the stationary points of the curve (3 mks)

ii)For each point in (b) (i) above, determine whether it is a maximum or a minimum (2 mks)

c) Sketch the curve. (2 mks)

b) Calculate the mid ordinates for five strips between x = 1 and x = 6, and hence use the mid- ordinate rule to approximate the area under the curve between x = 1, x = 6 and the x = axis (3 mks)

c) Assuming that the area determined by integration to be the actual area, calculate the percentage error in using the mid ordinate rule (4 mks)

PREFER CALLING SIR OBIERO AMOS @
0706 851 439
FOR QUICK SERVICE

ACQUIRE THE FOLLOWING
KASNEB NOTES/REVISION KITS
NOW :

CPA
ATD
CS
CICT
CIFA

0706851439
By Sir Obiero Amos Resources

&

AMOBI SOFT COPY PUBLISHERS
Transparency, Honesty and Accountability Defined

KASNEB
Study Materials

ATD LEVEL 3 STUDY TEXT
PRINCIPLES OF ECONOMICS
CPA SECTION 4 STUDY TEXT
QUANTITATIVE ANALYSIS
CIFA SECTION 1 STUDY TEXT
FINANCIAL MATHEMATICS
CS SECTION 6 STUDY TEXT
PUBLIC POLICY AND ADMINISTRATION